www.LaminatorsInc.com
800.523.2347
3255 Penn St, Hatfield, PA 19440

ADAPTACLAD® TF

(formerly 1-Piece, Tight-Fit Molding Legacy)

DESIGN & INSTALLATION FRONT-END INFORMATION

SYSTEM OVERVIEW

Laminators Inc. AdaptaClad TF is a progressive, weather-resistant, exterior wall cladding panel system. The panel system is designed to be fully field-fabricated and utilizes Omega-Lite® FR aluminum composite material (ACM) panels. Aluminum moldings encapsulate panel edges and provide various aesthetic options, while panel adhesive is used to secure the panel to the substrate. The panel system can be installed over a variety of substrates but is recommended for continuous (nailable) substrates including Laminators Inc. Omega CI® rigid insulation panels or other third-party structural insulated sheathing products.

DESIGN & INSTALLATION

This Laminators Inc. Design & Installation detail set consists of front-end information and details and is complete with respect to architectural design development and field installation. The front-end information outlines all applicable information for the panel system and its intended use. The details represent the panel system in relationship to a typical exterior wall assembly and provide required information for installation. Laminators Inc. makes no claim as to the application of the details to project-specific conditions.

CODES, STANDARDS, & TESTING

Laminators Inc. retains Professional Engineers (PE) licensed in the state of primary research & development, design, and manufacturing (i.e., Commonwealth of Pennsylvania) to provide structural design, detailing, and testing support for the panel system. Accordingly, the panel system has been designed and detailed to the International Building Code, including applicable Referenced Standards.

The panel system has been tested to the following Standards:

1. ASTM E283 Standard Test Method for Determining Rate of Air Leakage Through Exterior Windows, Curtain Walls, and Doors Under Specified Pressure Differences Across the Specimen

2. ASTM E330 Standard Test Method for Structural Performance of Exterior Windows, Doors, Skylights and Curtain Walls by Uniform Static Air Pressure Difference

3. ASTM E331 Standard Test Method for Water Penetration of Exterior Windows, Skylights, Doors, and Curtain Walls by Uniform Static Air Pressure Difference

4. NFPA 285 Standard Fire Test Method for Evaluation of Fire Propagation Characteristics of Exterior Wall Assemblies Containing Combustible Components

www.LaminatorsInc.com
800.523.2347
3255 Penn St, Hatfield, PA 19440

STRUCTURAL CAPACITY

The project-specific Components and Cladding (C&C) wind load requirements (*Required Strength*) established by the Design Professional of Record (DPR) shall not exceed the structural capacity of the panel system (*Available Strength*) as established by Laminators Inc.

Multiple structural capacities are provided within this detail set indicating required panel adhesive layout and molding installation screw requirements for various substrates. The end user is responsible for appropriate use of the information contained in this detail set based on project-specific wind load requirements. Laminators Inc. assumes no responsibility for failure of the panel system resulting from incorrect use of the presented information.

DELEGATED DESIGN

For project-specific specifications that require Delegated Design, Laminators Inc. PE may serve as a Specialty Structural Engineer (SSE) and prepare a calculation submittal for the Installer and General Contractor. The calculation submittal is system-specific and supports the documented structural capacity of the panel system. It is the responsibility of the DPR and Structural Engineer of Record (SER) for the project to review the calculation submittal for conformance with the project-specific design criteria.

Note that the Installer may need to acquire the services of a third-party PE licensed in the state of the project to evaluate the submittal prior to being provided to the DPR and SER.

NFPA 285 COMPLIANCE

The panel system has been tested in specific wall assemblies in accordance with, and meets the Conditions of Acceptance of, NFPA 285. Test reports are available upon request.

An Engineering Evaluation (EEV) is available from Laminators Inc. that presents specific engineering extensions and permits substitutions with respect to base wall components, cavity insulation, exterior sheathing, water-resistive barriers, and exterior insulation, while maintaining NFPA 285 compliance. The EEV may be required for project-specific submissions to an Authority Having Jurisdiction (AHJ).

Laminators Inc. takes no responsibility for NFPA 285 compliance related to wall assemblies incorporating Laminators products that are not documented under one of the following:

1) **Specific wall assemblies tested by Laminators Inc., or**
2) **An EEV supplied by Laminators Inc. from a third-party fire consultant**

If documented compliance is not available from Laminators Inc. for the proposed wall assembly, the DPR is responsible for contacting a third-party fire consultant to establish compliance via a separate EEV or modifying the proposed wall assembly to a compliant condition.

www.LaminatorsInc.com
800.523.2347
3255 Penn St, Hatfield, PA 19440

RECEIVING

Upon receipt of panels and accessories, perform a visual inspection and inventory to identify any damage that may have occurred during shipping and/or missing components. Any such conditions must be noted on the bill of lading at the time of receipt and must be immediately reported by the Installer to Laminators Inc.

STORAGE & HANDLING

1. Store panels horizontally on pallets in a dry, well-ventilated environment protected from construction activities and associated debris.

2. Store all panels and accessories a minimum of 4" above grade level to avoid contact with direct moisture (e.g., water, snow, etc.).

3. Storage temperatures shall not exceed 120°F.

4. Other materials shall not be stacked on, or placed in contact with, panels to prevent damage.

5. Protective masking should be left on all panels to prevent damage. Masking should be peeled back from edges of panels to facilitate installation into moldings but should not be removed entirely from the panel face until after installation. All masking shall be removed within two weeks of installation.

6. Handle all panels with clean work gloves to avoid hand injury from any sharp edges and to prevent staining.

PREPARATION & TOLERANCES

Field-verify all project-specific substrate conditions meet substrate criteria minimums as established by this detail set. The General Contractor (GC) is responsible for providing an acceptable substrate with the following tolerances:

1. Adjacent substrate surface out-of-plane offset: +/- 1/8"

2. Level, plumb, and location control line deviation: 1/4" in any 20 feet

3. Building elevation direction deviation: +/- 1/2"

Documentation shall be provided to the GC indicating any conditions detrimental to the installation of the panel system.

METALLIC & ANODIZED FINISHES

Variation and directionality are common characteristics across a range of colors, finishes, patterns, and textures of panel finishes. Therefore, project-specific coordination of panel orientation is particularly

www.LaminatorsInc.com
800.523.2347
3255 Penn St, Hatfield, PA 19440

important for metallic paint and anodized aluminum finishes. Directional arrows are printed on the masking to assist with same-direction panel orientation during installation.

WARRANTY

To satisfy the ACM Manufacturer's Material Warranty requirement of project-specific specifications, a Limited Warranty document is available from Laminators Inc. that is project-specific and consists of two parts: a *Panel Material and Product Warranty* and a *Panel and Extrusion Finish Warranty*.

The Limited Warranty is subject to stated terms, conditions, limitations, remedies, legal rights, and a disclaimer. Failure of the project-specific exterior wall assembly drawings, specifications, shop drawings, and/or installation to be in general conformance with the Laminators Inc. Design & Installation detail set may void one or both parts of the Limited Warranty. Laminators Inc. does not provide any installation warranty.

LAMINATORS
Composite Panel Solutions

www.LaminatorsInc.com
800.523.2347
3255 Penn St, Hatfield, PA 19440

ADAPTACLAD® TF
DESIGN & INSTALLATION DETAILS

DRAWING INDEX
REV 01, 11/2/2026

DWG NO.	TITLE	REV DATE	REV	CHANGE FROM PREVIOUS REV
101	PANEL SYSTEM OVERVIEW	10/26/2026	00	
102	JOINT MOLDINGS OVERVIEW	10/26/2026	00	
103	PERIMETER MOLDINGS OVERVIEW	10/26/2026	00	
104	SUBSTRATE COMPATIBILITY	10/26/2026	00	
105	NFPA 285 COMPLIANCE OPTIONS	10/26/2026	00	
106	NFPA 285 TESTED AIR GAP	10/26/2026	00	
201	TYPICAL ELEVATION – JOINTS, EDGES, & OPENINGS	10/26/2026	00	
202	TYPICAL ELEVATION – TRANSITIONS & PENETRATIONS	10/26/2026	00	
301	JOINT DETAIL (REVEAL H-MOLDING)	10/26/2026	00	
301.A	JOINT DETAIL (H-MOLDING)	10/26/2026	00	
302	PANEL ADHESIVE DETAIL (NO SHIM OR 1/8” SHIM AT MOLDING)	10/26/2026	00	
302.A	PANEL ADHESIVE DETAIL (1/4” SHIM AT MOLDING)	10/26/2026	00	
303	BOTTOM HORIZONTAL EDGE DETAIL	10/26/2026	00	
304	TOP HORIZONTAL EDGE DETAIL	10/26/2026	00	
305	LEFT VERTICAL EDGE DETAIL	10/26/2026	00	
306	RIGHT VERTICAL EDGE DETAIL	10/26/2026	00	
307	HEAD DETAIL AT OPENING	10/26/2026	00	
307.A	HEAD DETAIL AT OPENING (OMEGA CI)	10/26/2026	00	
308	SILL DETAIL AT OPENING	10/26/2026	00	
309	LEFT JAMB DETAIL AT OPENING	10/26/2026	00	
309.A	LEFT JAMB DETAIL AT OPENING (OMEGA CI)	10/26/2026	00	
310	RIGHT JAMB DETAIL AT OPENING	10/26/2026	00	
311	INSIDE CORNER DETAIL	10/26/2026	00	
311.A	INSIDE CORNER DETAIL (FABRICATED PANEL)	10/26/2026	00	
312	OUTSIDE CORNER DETAIL	10/26/2026	00	
312.A	OUTSIDE CORNER DETAIL (FABRICATED PANEL)	10/26/2026	00	
313	SOFFIT-TO-WALL TRANSITION DETAIL (DOUBLE TERM J-MOLDING)	10/26/2026	00	
313.A	SOFFIT-TO-WALL TRANSITION DETAIL (J- & TERM J-MOLDING)	10/26/2026	00	

www.LaminatorsInc.com
800.523.2347
3255 Penn St, Hatfield, PA 19440

DWG NO.	TITLE	REV DATE	REV	CHANGE FROM PREVIOUS REV
314	FASCIA-TO-SOFFIT TRANSITION DETAIL (DOUBLE J-MOLDING)	10/26/2026	00	
314.A	FASCIA-TO-SOFFIT TRANSITION DETAIL (CORNER MOLDING)	10/26/2026	00	
314.B	FASCIA-TO-SOFFIT TRANSITION DETAIL (FABRICATED PANEL)	10/26/2026	00	
315	PANEL PENETRATION DETAIL	10/26/2026	00	
401	MOLDING SCREW TYPE & PLACEMENT	11/2/2026	01	Screw part numbers added
402	LAYOUT REQUIREMENTS – CONTINUOUS (NAILABLE) SUBSTRATES	11/2/2026	01	Clarified panel adhesive application requirements
403	LAYOUT REQUIREMENTS – GYPSUM SHEATHING	11/2/2026	01	Clarified panel adhesive application requirements
404	LAYOUT REQUIREMENTS – MINERAL WOOL W/ Z-GIRTS OR RAILS	11/2/2026	01	Clarified panel adhesive application requirements
501	PANEL CUT SIZE RECOMMENDATIONS	10/26/2026	00	
502	SOFFIT VENT INSTALLATION	10/26/2026	00	
503	FABRICATED PANEL CORNERS	10/26/2026	00	
504	MOLDING PROFILES	10/26/2026	00	
505	TERMINATION Z-MOLDING REQUIREMENTS	10/26/2026	00	

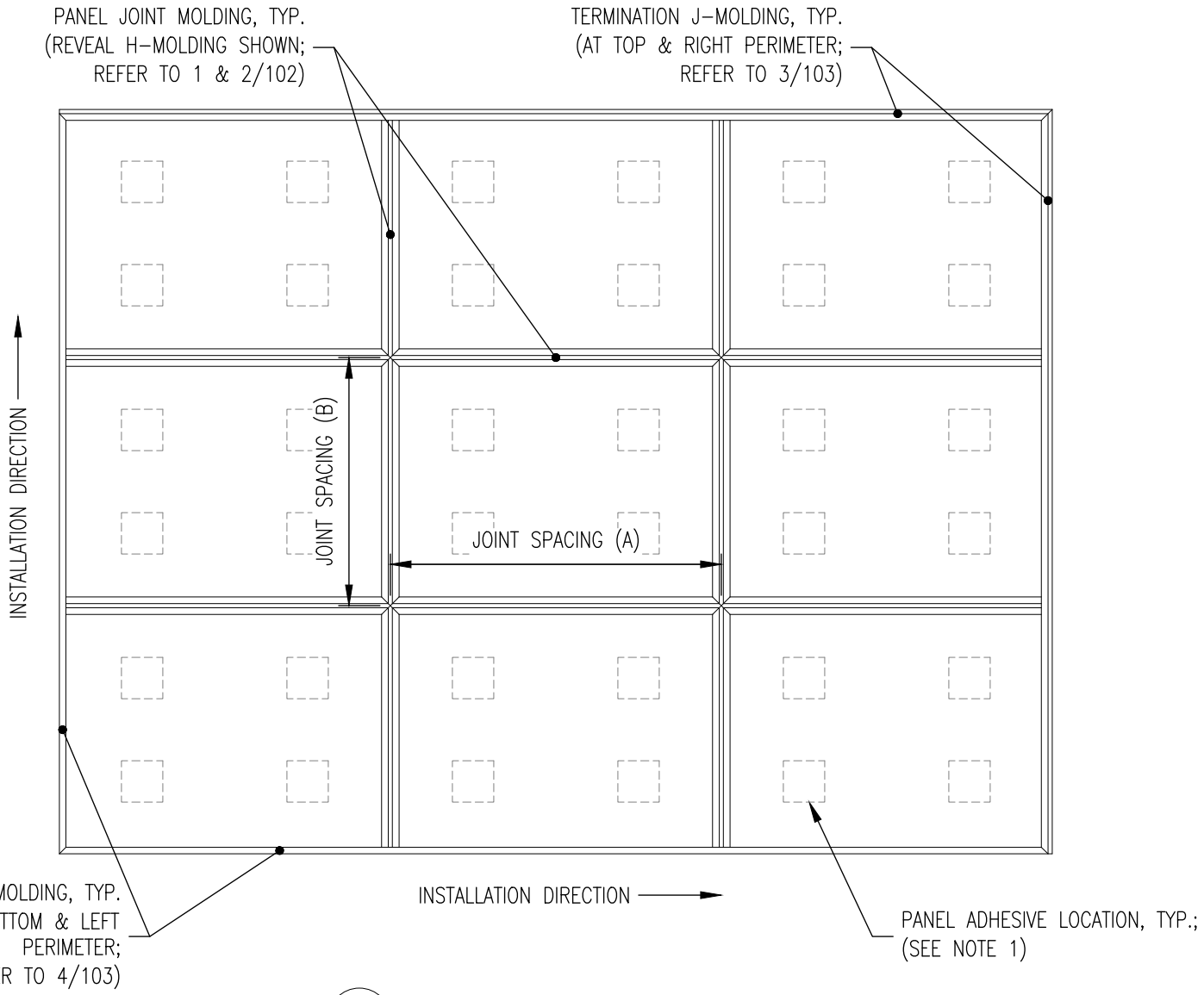

1 REPRESENTATIVE PANEL LAYOUT
(NOT TO SCALE)

NOTES:

1. PANEL ADHESIVE APPLIED BETWEEN BACK OF PANEL AND STEEL PLATES SECURED TO SUBSTRATE; REQUIRED LAYOUT VARIES BY PANEL SIZE, STRUCTURAL CAPACITY, AND SUBSTRATE (REFER TO 402 THRU 404 FOR MORE INFORMATION)
2. MAXIMUM JOINT SPACING:
   - (A): UP TO 144"; LIMITED TO 60" IF (B) > 60"
   - (B): UP TO 144"; LIMITED TO 60" IF (A) > 60"
   - SOME PANEL FINISH OPTIONS LIMITED TO 48"; CONTACT LAMINATORS FOR MORE INFORMATION
3. REFER TO 102 FOR JOINT MOLDINGS OVERVIEW
4. REFER TO 103 FOR PERIMETER MOLDINGS OVERVIEW
5. REFER TO 104 FOR SUBSTRATE COMPATIBILITY
6. REFER TO 105 FOR NFPA 285 COMPLIANCE OPTIONS
7. REFER TO 106 FOR NFPA 285 TESTED AIR GAP

LAMINATORS
Composite Panel Solutions
www.LaminatorsInc.com
800.523.2347

PANEL SYSTEM OVERVIEW

ADAPTACLAD TF
DESIGN & INSTALLATION DETAILS

Date:	Drawn By:	Detail Set:	Dwg. No.:	Rev:
10/26/2026	JJM	AC-TF	101	00

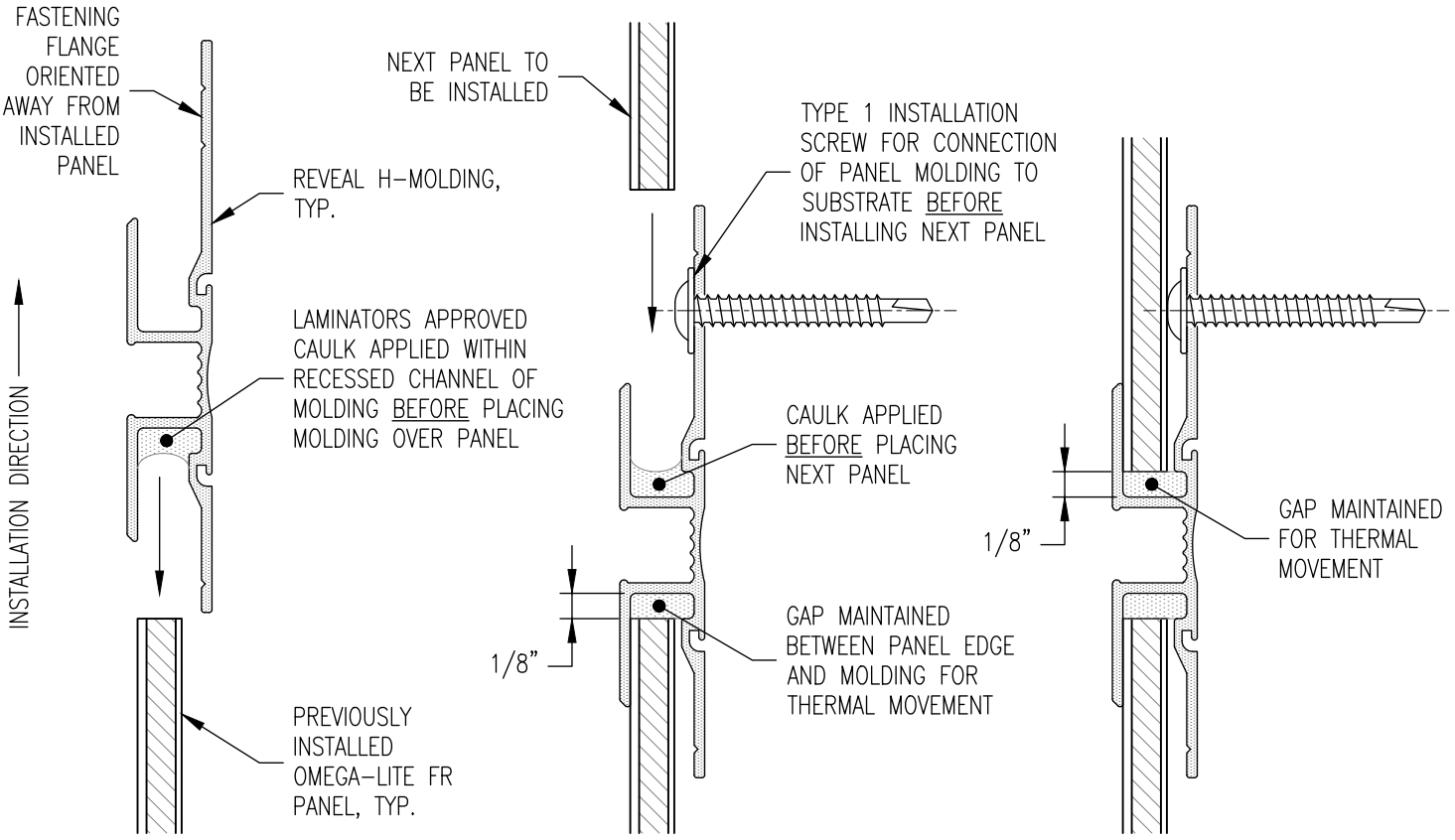

1 SECTIONS
REVEAL H-MOLDING

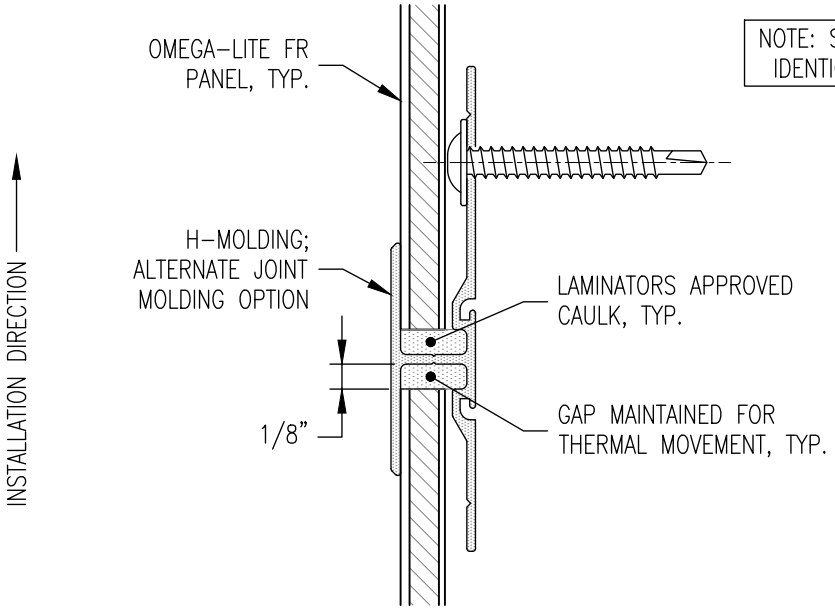

NOTE: SEQUENCING FOR H-MOLDING IDENTICAL TO REVEAL H-MOLDING

2 SECTION
H-MOLDING

LAMINATORS
Composite Panel Solutions

www.LaminatorsInc.com 800.523.2347

JOINT MOLDINGS OVERVIEW

ADAPTACLAD TF
DESIGN & INSTALLATION DETAILS

Date:	Drawn By:	Detail Set:	Dwg. No.:	Rev:
10/26/2026	JJM	AC-TF	102	00

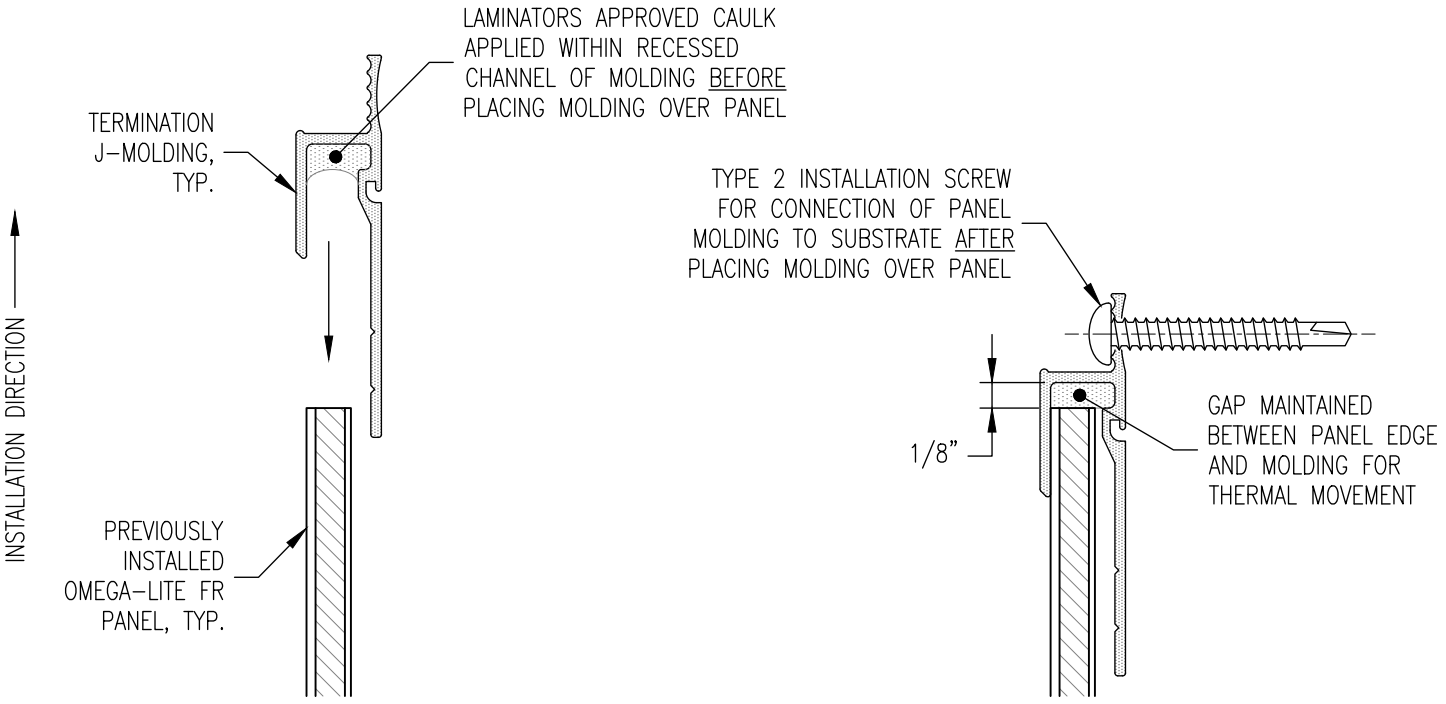

3 SECTIONS
TERMINATION J-MOLDING

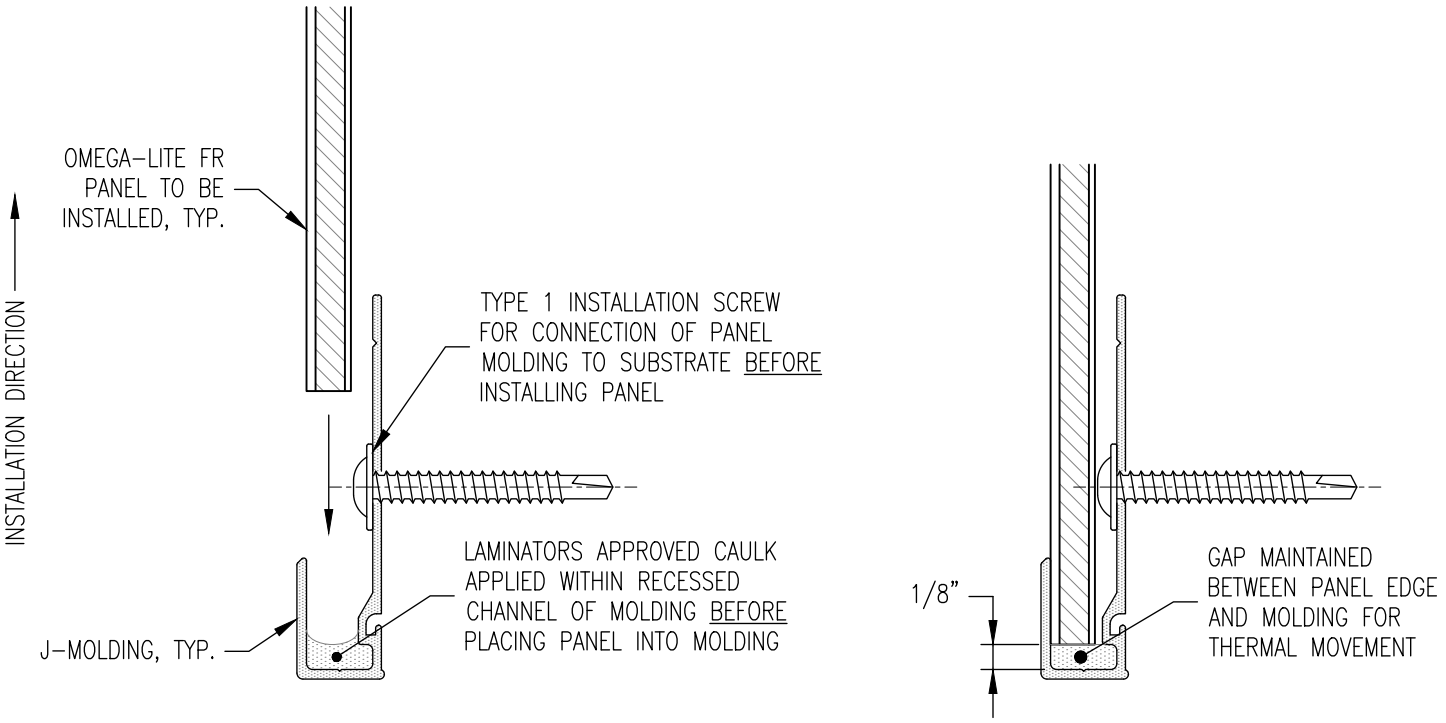

4 SECTIONS
J-MOLDING

LAMINATORS
Composite Panel Solutions

www.LaminatorsInc.com 800.523.2347

PERIMETER MOLDINGS OVERVIEW

ADAPTACLAD TF
DESIGN & INSTALLATION DETAILS

Date:	Drawn By:	Detail Set:	Dwg. No.:	Rev:
10/26/2026	JJM	AC-TF	103	00

TABLE 1: SUBSTRATE COMPATIBILITY		
SUBSTRATE TYPE [1]	MINIMUM CRITERIA	MAXIMUM STRUCTURAL CAPACITY (PSF) [ASD]
COLD-FORMED STEEL FRAMING [2] (CFSF)	18 GA. (43 MILS) F_U = 45 KSI (GRADE 33) 1-1/4" FACE WIDTH	60
PLYWOOD [3]	15/32" (1/2" NOM)	
OSB [4]	19/32" (5/8" NOM)	
OSB (ZIP SYSTEM)	7/16"	
CONCRETE	*SEE NOTE 5*	
CMU (ASTM C90)		

1. INSTALLATION OVER OPEN FRAMING NOT PERMITTED (I.E., CONDITIONS EXPOSING BACK SIDE OF PANELS TO WIND LOADS OR OPEN TO INTERIOR SPACE)
2. REQUIRES SUPPLEMENTAL FRAMING TO SUPPORT PANEL MOLDINGS (WITH OR WITHOUT EXTERIOR GRADE GYPSUM SHEATHING); 4" WIDE, 18 GA. CONTINUOUS STRAPPING RECOMMENDED (REFER TO 403 AND 404 FOR MORE INFORMATION)
3. STRUCTURAL CAPACITY BASED ON PULLOUT FROM PLYWOOD SHEATHING WITH SPECIFIC GRAVITY = 0.55 (SOUTHERN PINE)
4. STRUCTURAL CAPACITY BASED ON PULLOUT FROM OSB SHEATHING WITH SPECIFIC GRAVITY = 0.49 (SOUTHERN PINE)
5. DIRECT ANCHORAGE TO CONCRETE OR CMU NOT PERMITTED; SEE OPTIONS BELOW:
   - CFSF FRAMING OVER CONCRETE OR CMU: USE IF NFPA 285 COMPLIANCE IS NOT REQUIRED (NO LIMIT ON AIR GAP BEHIND PANELS); CFSF FRAMING BY OTHERS
   - PLYWOOD-FACED RIGID INSULATION OVER CONCRETE OR CMU: USE IF NFPA 285 COMPLIANCE IS REQUIRED; PRODUCT OPTIONS AVAILABLE FROM LAMINATORS

TABLE 2: NFPA 285 COMPLIANCE OPTIONS [1 2 3]			
BASE WALL	EXTERIOR SHEATHING	CONTINUOUS INSULATION	MAXIMUM PERMITTED AIR GAP [4]
STUD FRAMING [5]	MAGNESIUM OXIDE (MgO) STRUCTURAL INSULATED SHEATHING	FRT PLYWOOD-FACED RIGID POLYISO [9] *4.1" (MAX) THICKNESS* MINERAL WOOL	3/8"
	EXTERIOR GRADE GYPSUM SHEATHING [6]		
	PLYWOOD SHEATHING [7]		
CONCRETE [8]			
CMU [8]			

1. COMPLIANCE OPTIONS PRESENTED ARE BASED ON TESTING PERFORMED BY LAMINATORS IN COMBINATION WITH AN ENGINEERING EVALUATION (EEV) PREPARED BY A THIRD-PARTY FIRE CONSULTANT
2. OPTIONS PRESENTED ARE NOT COMPREHENSIVE AND ADDITIONAL OPTIONS OR LIMITATIONS MAY EXIST BASED ON PROJECT-SPECIFIC CONDITIONS; CONTACT LAMINATORS TECHNICAL SERVICES FOR MORE INFORMATION
3. COMPLIANT AIR AND WATER BARRIER (AWB) / WATER-RESISTIVE BARRIER (WRB) PRODUCTS ARE INDICATED IN THE EEV AVAILABLE FROM LAMINATORS
4. MAXIMUM PERMITTED AIR GAP IS MEASURED FROM FACE OF SHEATHING (OR EXTERIOR INSULATION, IF PRESENT) TO INTERIOR FACE OF OMEGA-LITE FR PANEL (REFER TO 106)
5. 18 GA. (MIN) CFSF
6. 1/2" (MIN)
7. FRT PLYWOOD MAY BE PERMITTED IN SOME ASSEMBLIES; REQUIRES LAYER OF EXTERIOR GRADE GYPSUM SHEATHING BEHIND THE FRT PLYWOOD
8. REQUIRES USE OF OMEGA CI OVER CONCRETE / CMU TO MAINTAIN COMPLIANCE; INCLUSION OF SUB-FRAMING (BY OTHERS) TO FACILITATE INSTALLATION NOT TESTED FOR COMPLIANCE
9. SPECIFIC COMPLIANT PRODUCTS ARE INCLUDED IN THE EEV AVAILABLE FROM LAMINATORS

IMPORTANT NOTICE: THE DESIGN PROFESSIONAL OF RECORD (DPR) IS RESPONSIBLE FOR ESTABLISHING NFPA 285 COMPLIANCE FOR ANY WALL ASSEMBLY INCORPORATING COMBUSTIBLE COMPONENTS AS REQUIRED BY APPLICABLE BUILDING CODE. LAMINATORS TAKES NO RESPONSIBILITY FOR NFPA 285 COMPLIANCE RELATED TO WALL ASSEMBLIES INCORPORATING LAMINATORS PRODUCTS THAT ARE NOT DOCUMENTED UNDER ONE OF THE FOLLOWING: 1) SPECIFIC WALL ASSEMBLIES TESTED BY LAMINATORS, OR 2) AN ENGINEERING EVALUATION (EEV) SUPPLIED BY LAMINATORS FROM A THIRD-PARTY FIRE CONSULTANT. IF DOCUMENTED COMPLIANCE IS NOT AVAILABLE FROM LAMINATORS FOR THE PROPOSED WALL ASSEMBLY, THE DPR IS RESPONSIBLE FOR CONTACTING A THIRD-PARTY FIRE CONSULTANT TO ESTABLISH COMPLIANCE VIA A SEPARATE EEV OR MODIFYING THE PROPOSED WALL ASSEMBLY TO A COMPLIANT CONDITION.

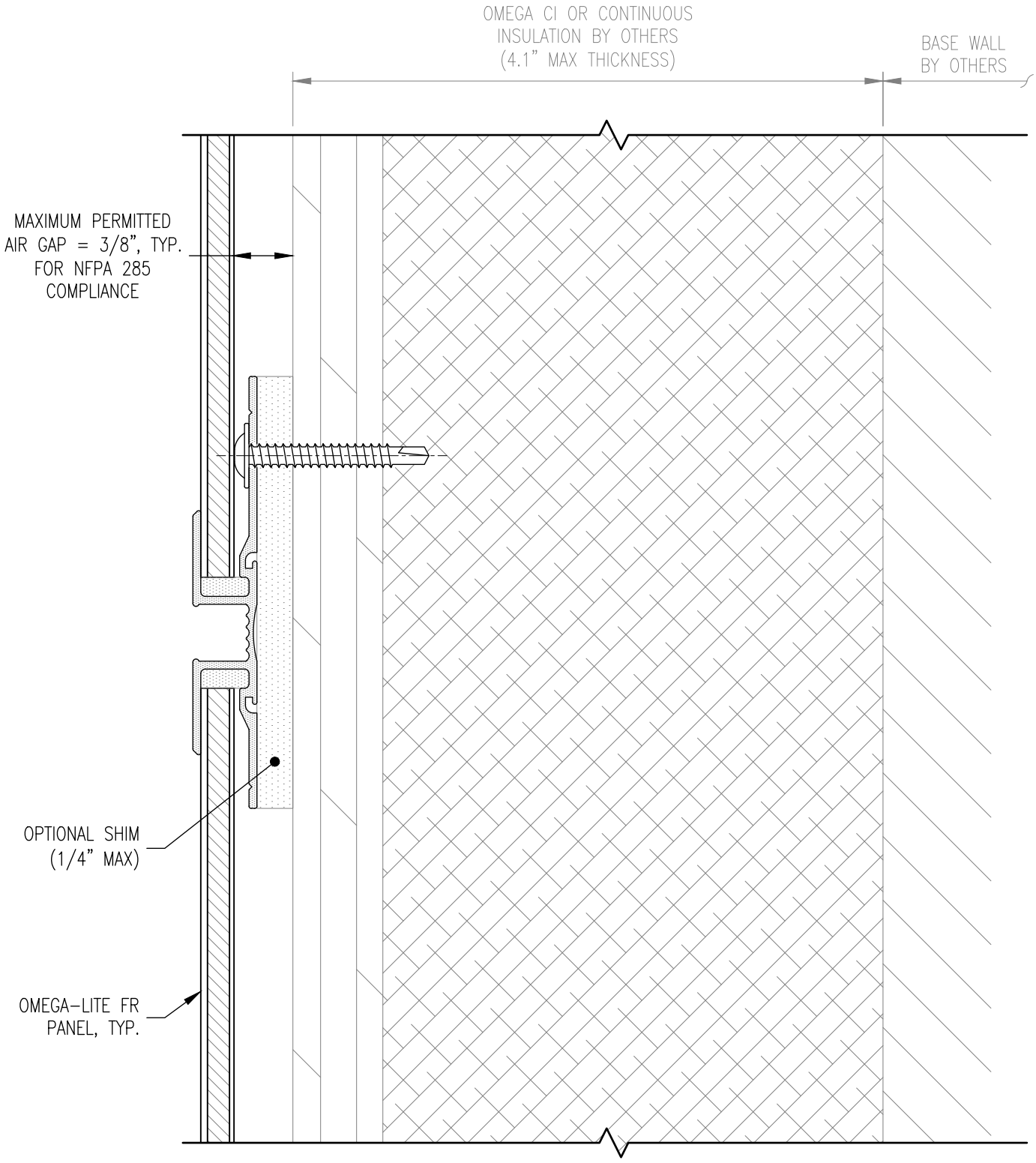

106 SECTION

LAMINATORS
Composite Panel Solutions

www.LaminatorsInc.com 800.523.2347

NFPA 285 TESTED AIR GAP

ADAPTACLAD TF
DESIGN & INSTALLATION DETAILS

Date:	Drawn By:	Detail Set:	Dwg. No.:	Rev:
10/26/2026	JJM	AC-TF	106	00

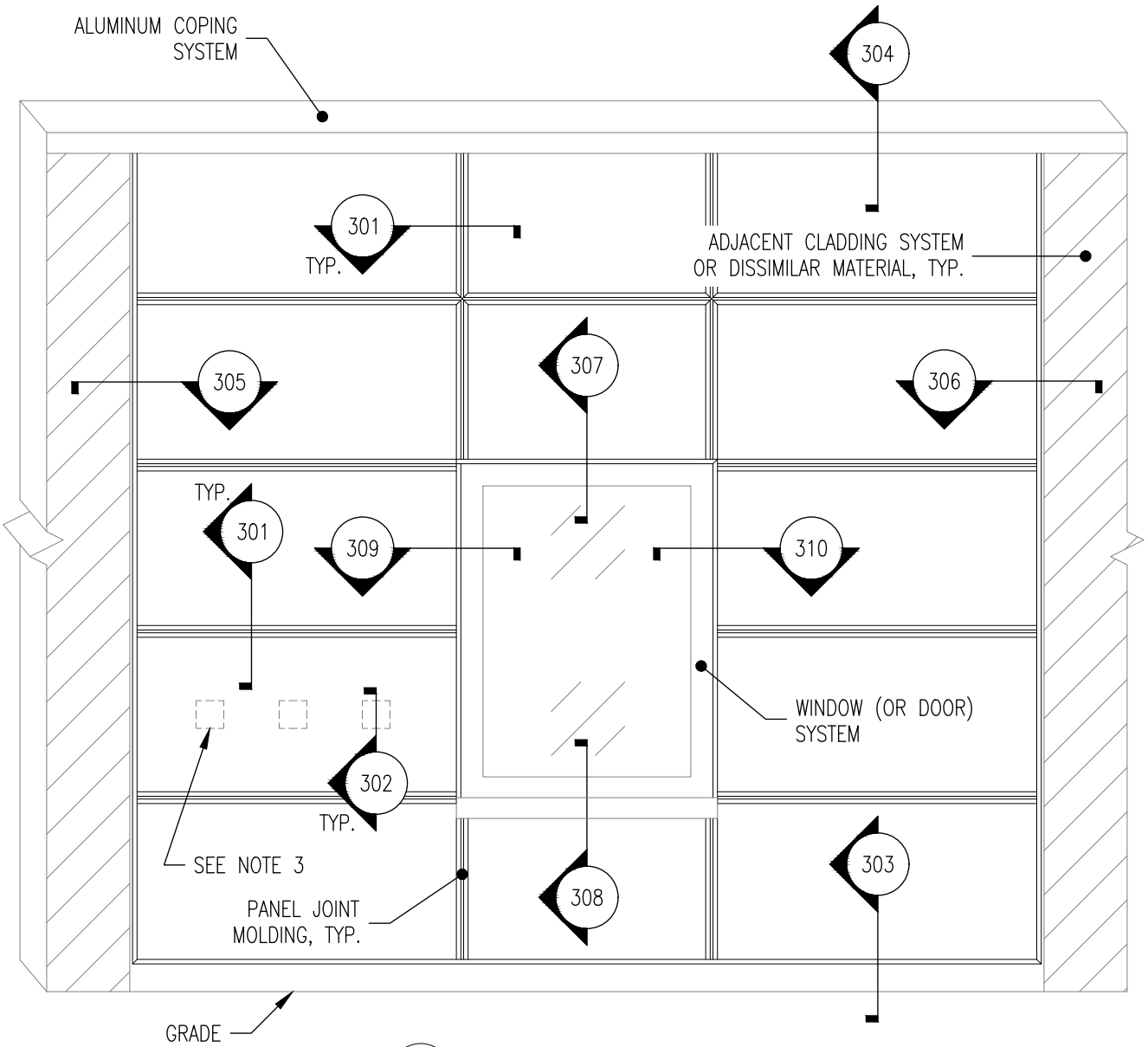

1 TYPICAL ELEVATION
JOINTS, EDGES, & OPENINGS

NOTES:
1. ELEVATION IS REPRESENTATIVE; PROJECT-SPECIFIC CONDITIONS WILL VARY
2. PROJECT-SPECIFIC SUBSTRATE CONDITIONS MAY REQUIRE SUPPLEMENTAL FRAMING
3. PANEL ADHESIVE LOCATIONS SHOWN FOR SINGLE PANEL ONLY; REFER TO 402 THRU 404 FOR ADHESIVE LAYOUT REQUIREMENTS

LAMINATORS
Composite Panel Solutions
www.LaminatorsInc.com
800.523.2347

TYPICAL ELEVATION - JOINTS, EDGES, & OPENINGS

ADAPTACLAD TF
DESIGN & INSTALLATION DETAILS

Date:	Drawn By:	Detail Set:	Dwg. No.:	Rev:
10/26/2026	JJM	AC-TF	201	00

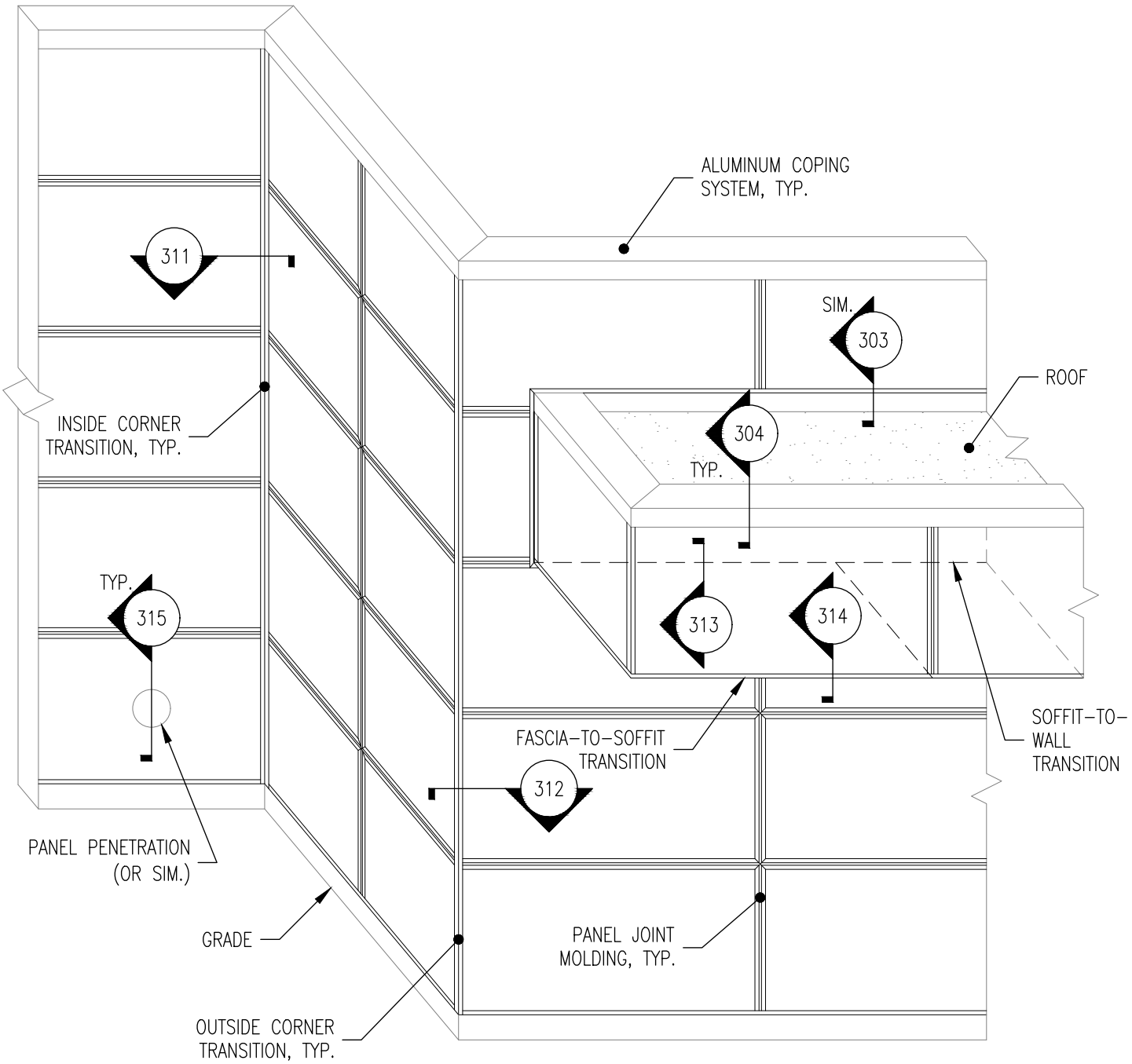

2 TYPICAL ELEVATION
TRANSITIONS & PENETRATIONS

NOTES:
1. ELEVATION IS REPRESENTATIVE; PROJECT–SPECIFIC CONDITIONS WILL VARY
2. PROJECT–SPECIFIC SUBSTRATE CONDITIONS MAY REQUIRE SUPPLEMENTAL FRAMING

LAMINATORS
Composite Panel Solutions

www.LaminatorsInc.com 800.523.2347

TYPICAL ELEVATION - TRANSITIONS & PENETRATIONS

ADAPTACLAD TF
DESIGN & INSTALLATION DETAILS

Date:	Drawn By:	Detail Set:	Dwg. No.:	Rev:
10/26/2026	JJM	AC-TF	202	00

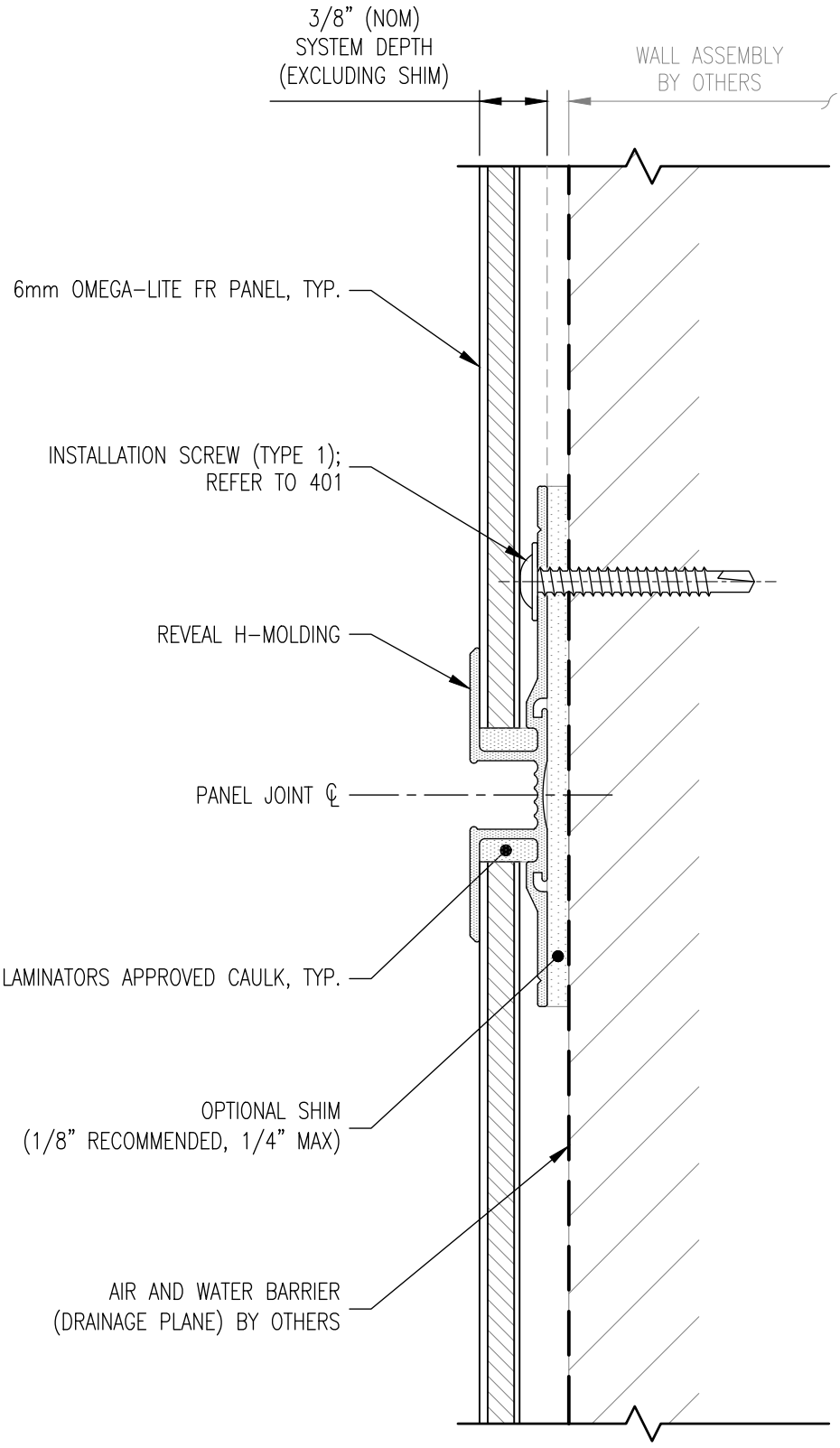

301 SECTION

NOTE: REFER TO 301.A FOR ALTERNATE JOINT DETAIL OPTION

DETAIL APPLICABLE TO HORIZONTAL AND VERTICAL JOINT CONDITIONS

LAMINATORS
Composite Panel Solutions

www.LaminatorsInc.com 800.523.2347

JOINT DETAIL (REVEAL H-MOLDING)

ADAPTACLAD TF
DESIGN & INSTALLATION DETAILS

Date:	Drawn By:	Detail Set:	Dwg. No.:	Rev:
10/26/2026	JJM	AC-TF	301	00

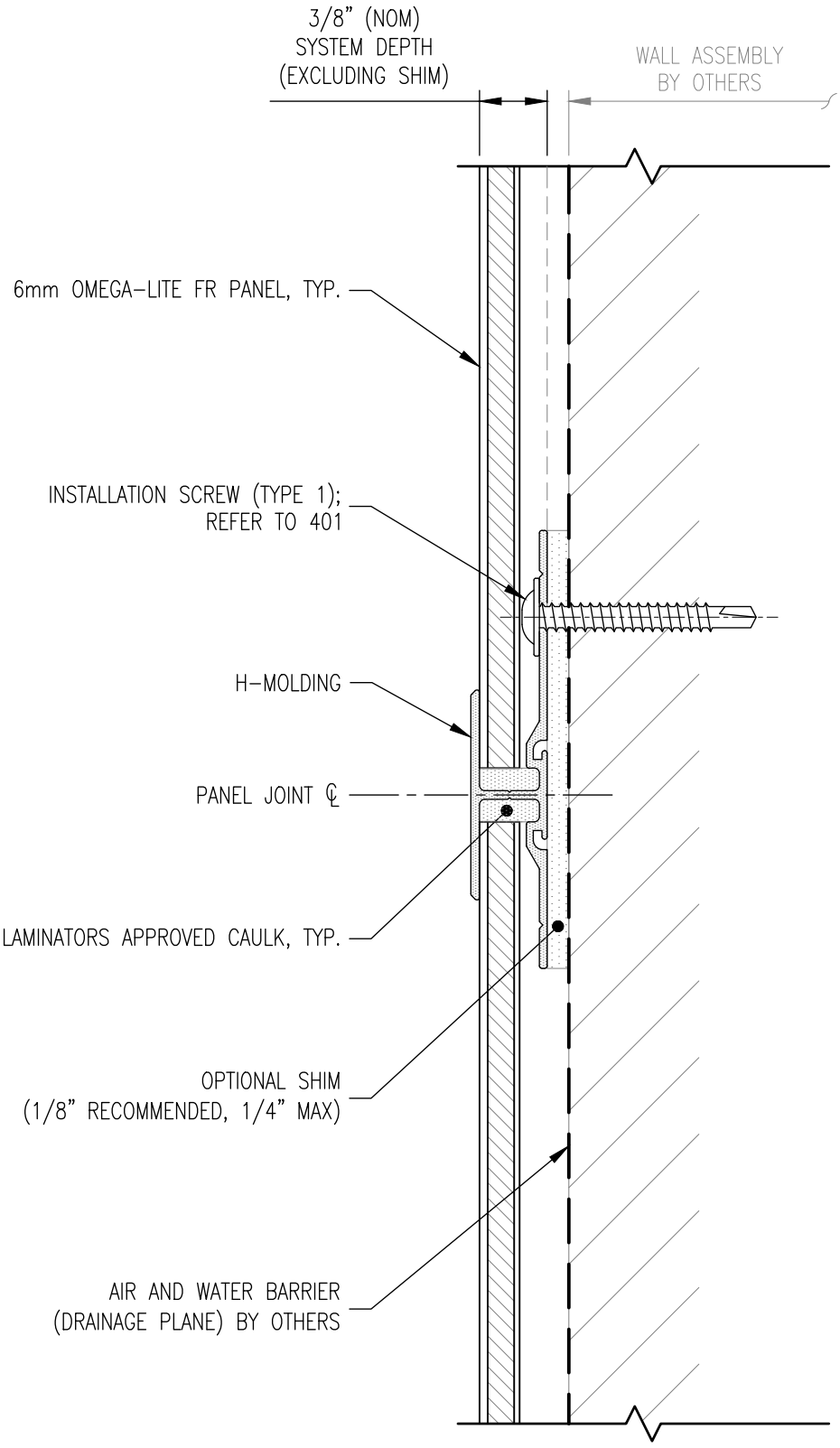

301.A SECTION

DETAIL APPLICABLE TO HORIZONTAL AND VERTICAL JOINT CONDITIONS

LAMINATORS
Composite Panel Solutions

www.LaminatorsInc.com 800.523.2347

JOINT DETAIL (H-MOLDING)

ADAPTACLAD TF
DESIGN & INSTALLATION DETAILS

Date:	Drawn By:	Detail Set:	Dwg. No.:	Rev:
10/26/2026	JJM	AC-TF	301.A	00

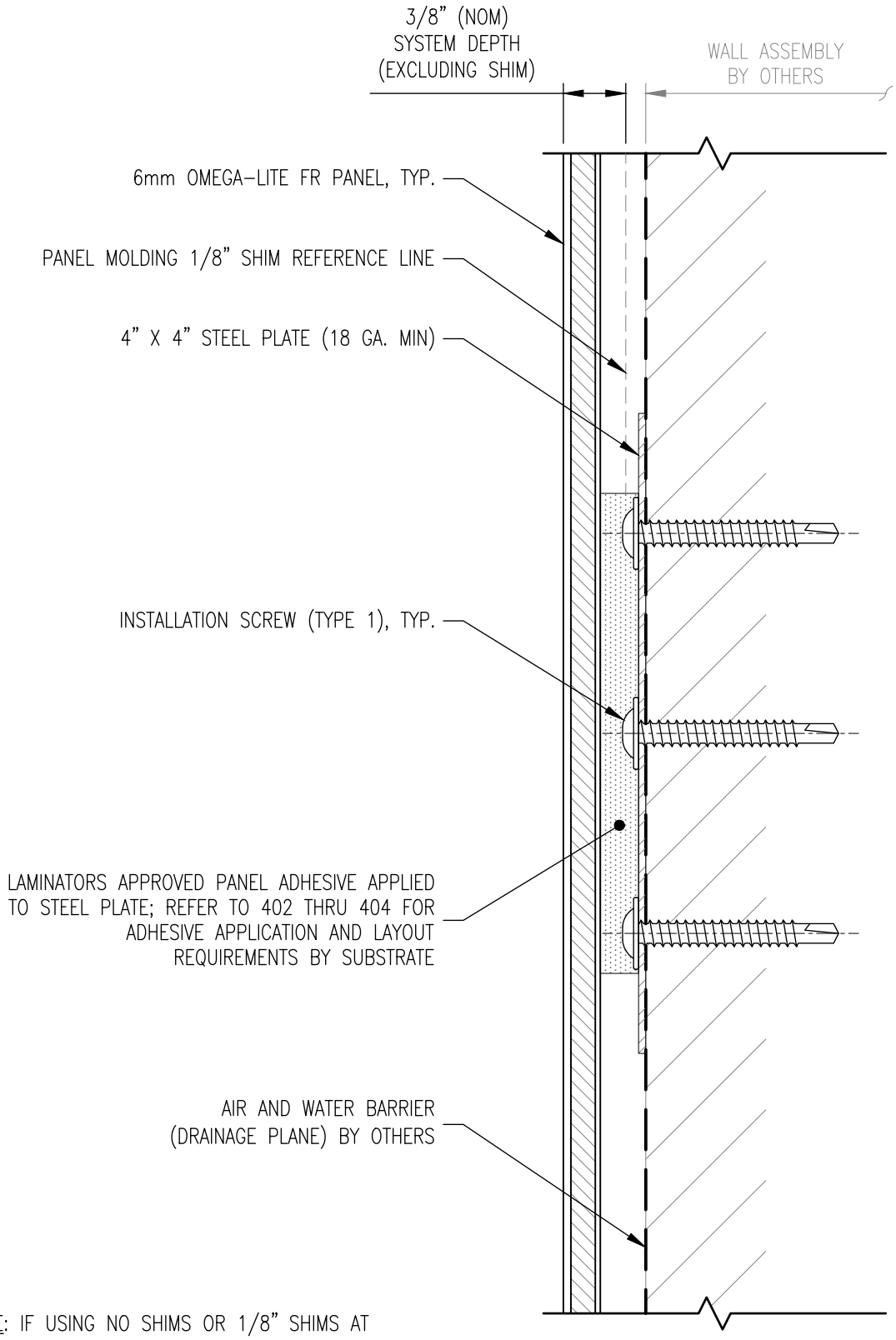

NOTE: IF USING NO SHIMS OR 1/8" SHIMS AT PANEL MOLDINGS, NO SHIMS REQUIRED BEHIND ADHESIVE STEEL PLATES; REFER TO 302.A FOR SHIM REQUIREMENTS IF USING 1/4" SHIMS

302 SECTION

LAMINATORS
Composite Panel Solutions

www.LaminatorsInc.com 800.523.2347

PANEL ADHESIVE DETAIL (NO SHIM OR 1/8" SHIM AT MOLDING)

ADAPTACLAD TF
DESIGN & INSTALLATION DETAILS

Date:	Drawn By:	Detail Set:	Dwg. No.:	Rev:
10/26/2026	JJM	AC-TF	302	00

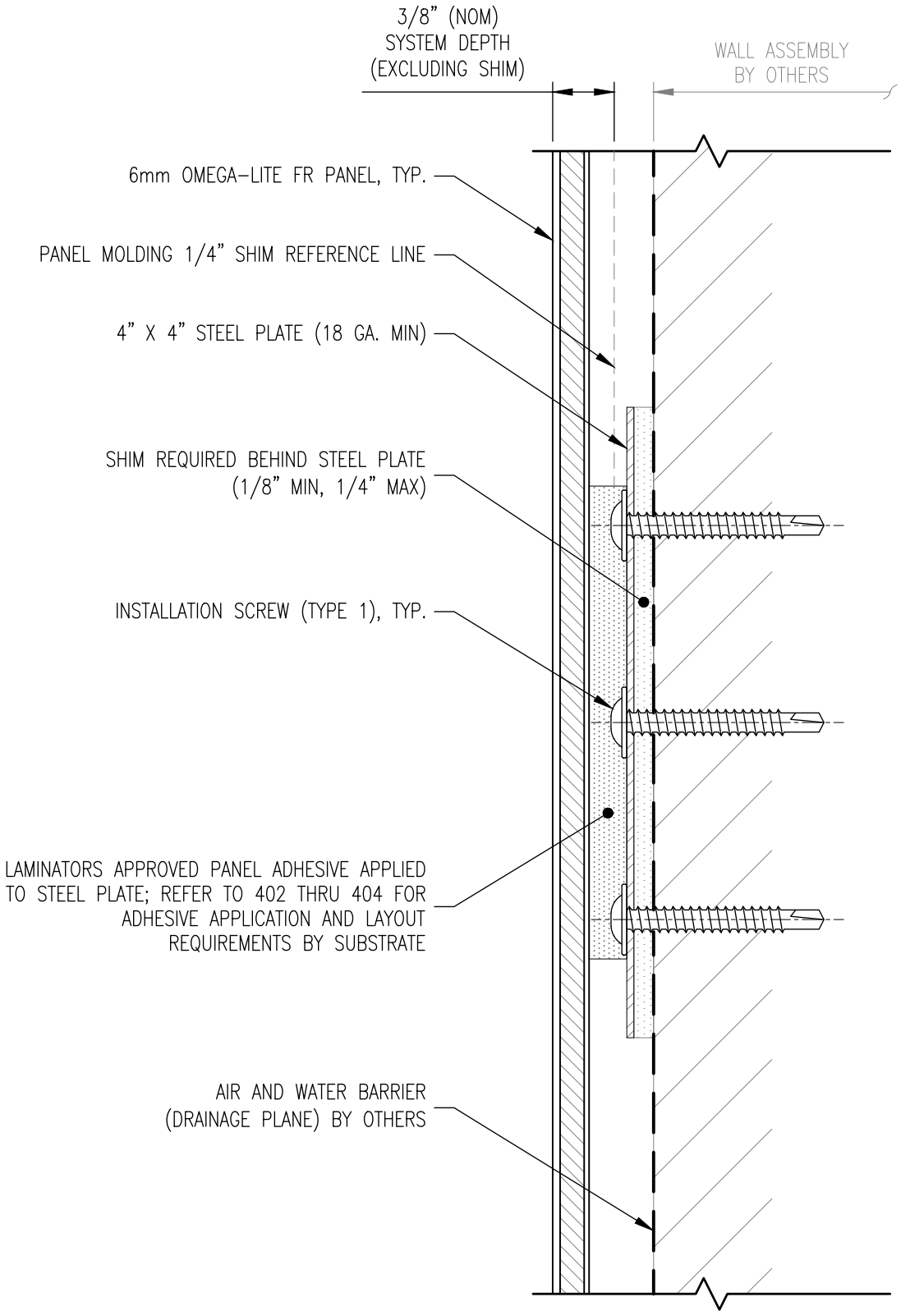

302.A SECTION

DETAIL ONLY APPLICABLE IF USING 1/4" SHIMS AT PANEL MOLDINGS

LAMINATORS
Composite Panel Solutions

www.LaminatorsInc.com 800.523.2347

PANEL ADHESIVE DETAIL (1/4" SHIM AT MOLDING)

ADAPTACLAD TF
DESIGN & INSTALLATION DETAILS

Date:	Drawn By:	Detail Set:	Dwg. No.:	Rev:
10/26/2026	JJM	AC-TF	302.A	00

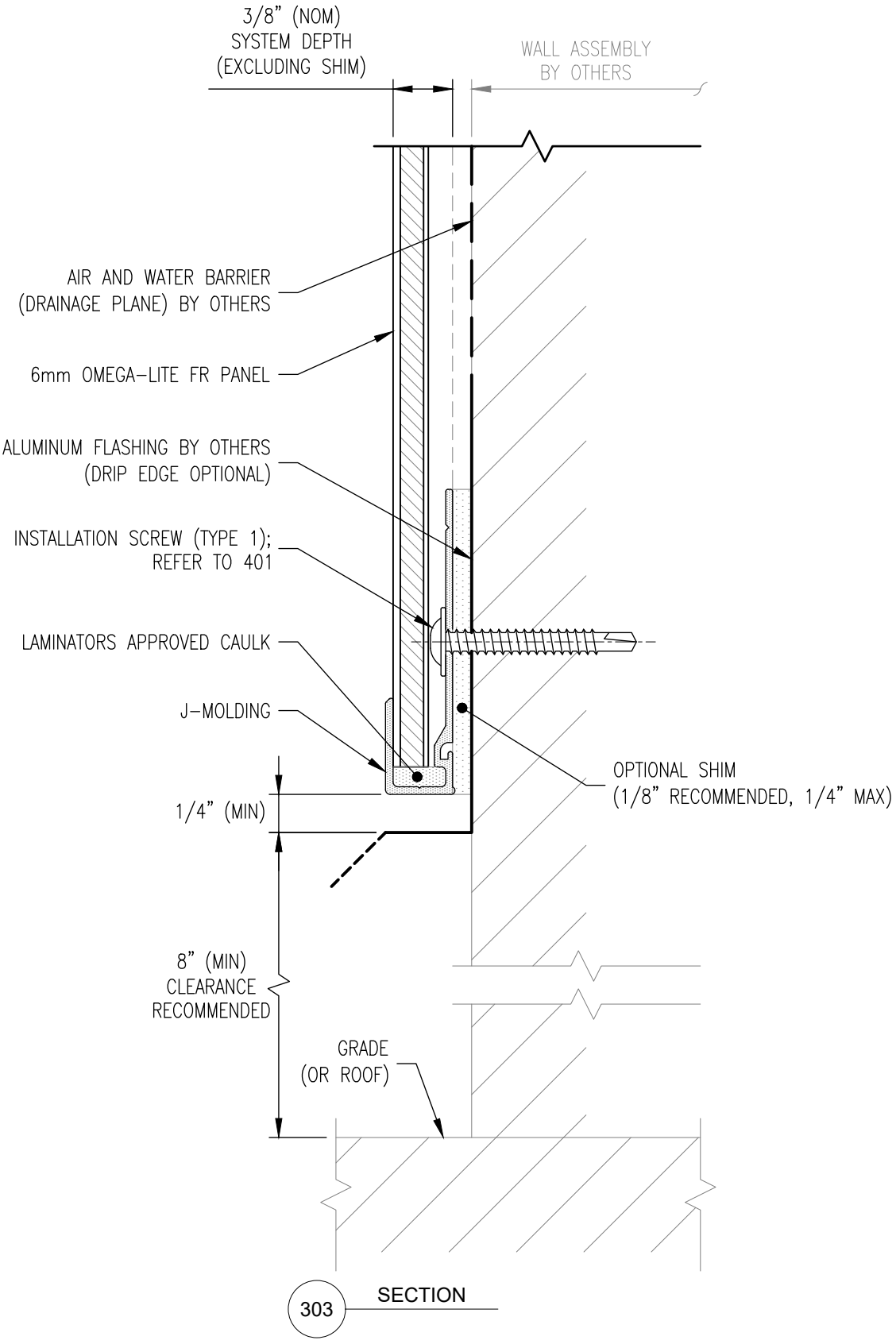

LAMINATORS
Composite Panel Solutions

www.LaminatorsInc.com 800.523.2347

BOTTOM HORIZONTAL EDGE DETAIL

ADAPTACLAD TF
DESIGN & INSTALLATION DETAILS

Date:	Drawn By:	Detail Set:	Dwg. No.:	Rev:
10/26/2026	JJM	AC-TF	303	00

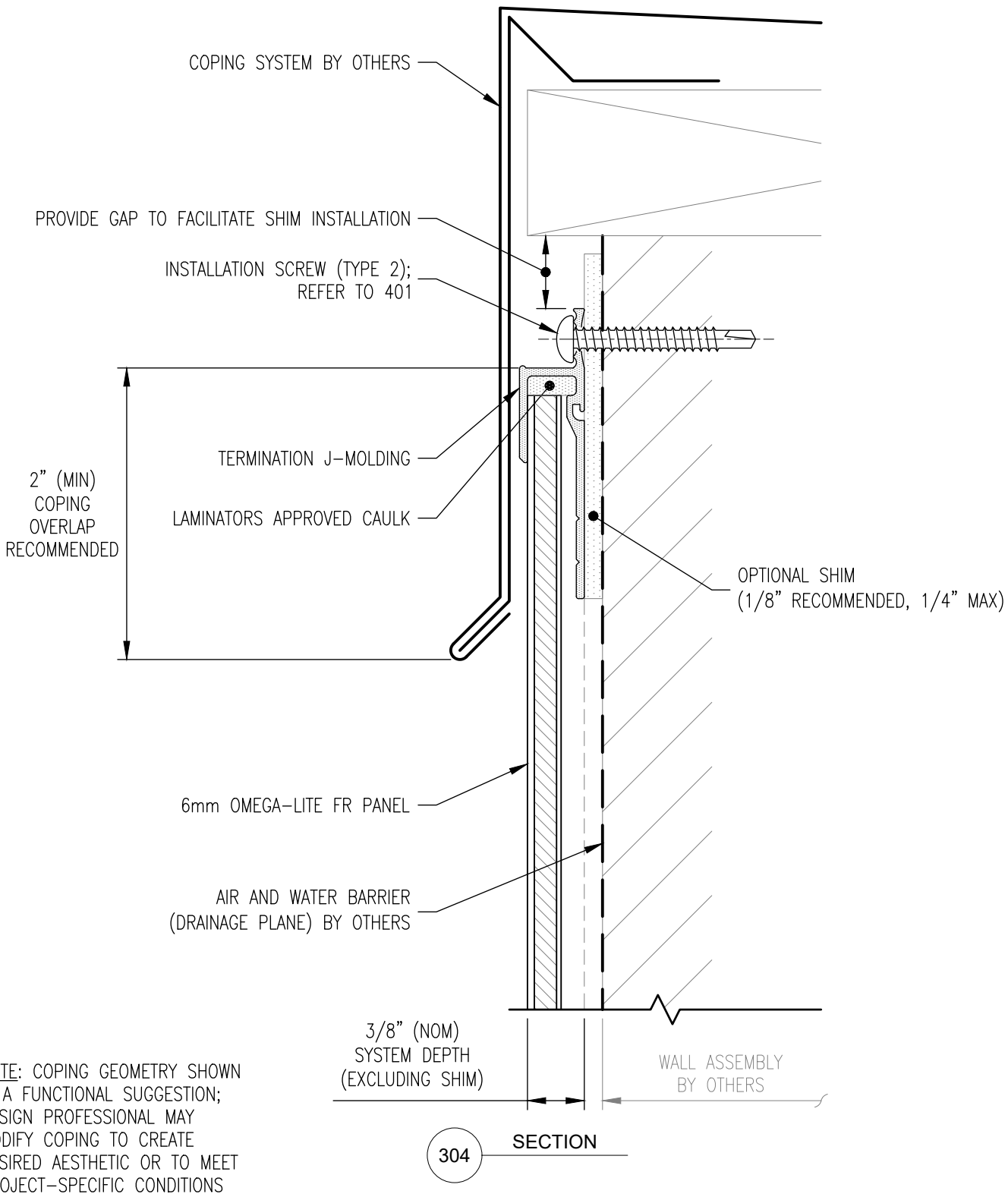

304 SECTION

NOTE: COPING GEOMETRY SHOWN IS A FUNCTIONAL SUGGESTION; DESIGN PROFESSIONAL MAY MODIFY COPING TO CREATE DESIRED AESTHETIC OR TO MEET PROJECT-SPECIFIC CONDITIONS

LAMINATORS
Composite Panel Solutions

www.LaminatorsInc.com 800.523.2347

TOP HORIZONTAL EDGE DETAIL

ADAPTACLAD TF
DESIGN & INSTALLATION DETAILS

Date:	Drawn By:	Detail Set:	Dwg. No.:	Rev:
10/26/2026	JJM	AC-TF	304	00

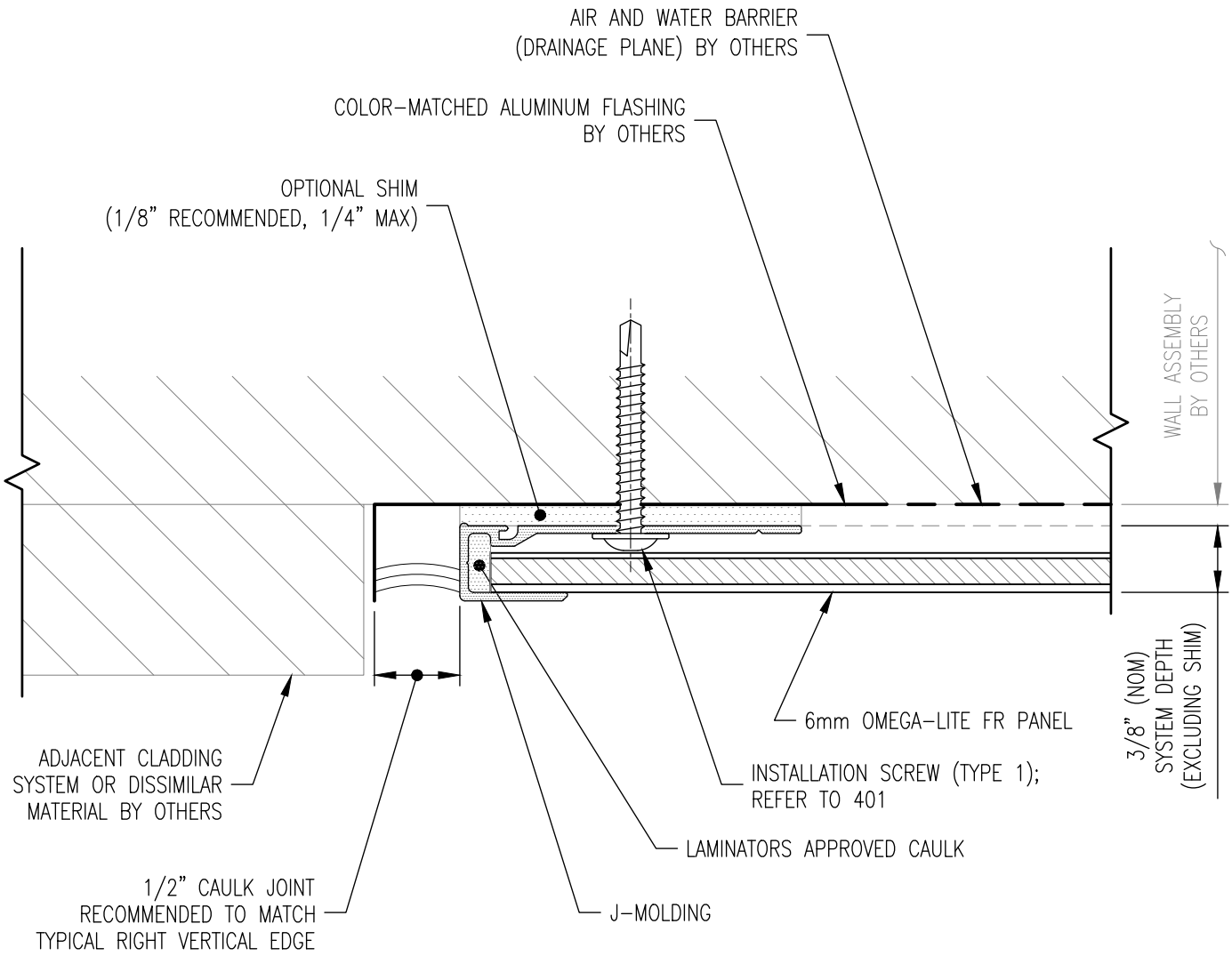

305 PLAN SECTION

LAMINATORS
Composite Panel Solutions

www.LaminatorsInc.com 800.523.2347

LEFT VERTICAL EDGE DETAIL

ADAPTACLAD TF
DESIGN & INSTALLATION DETAILS

Date:	Drawn By:	Detail Set:	Dwg. No.:	Rev:
10/26/2026	JJM	AC-TF	305	00

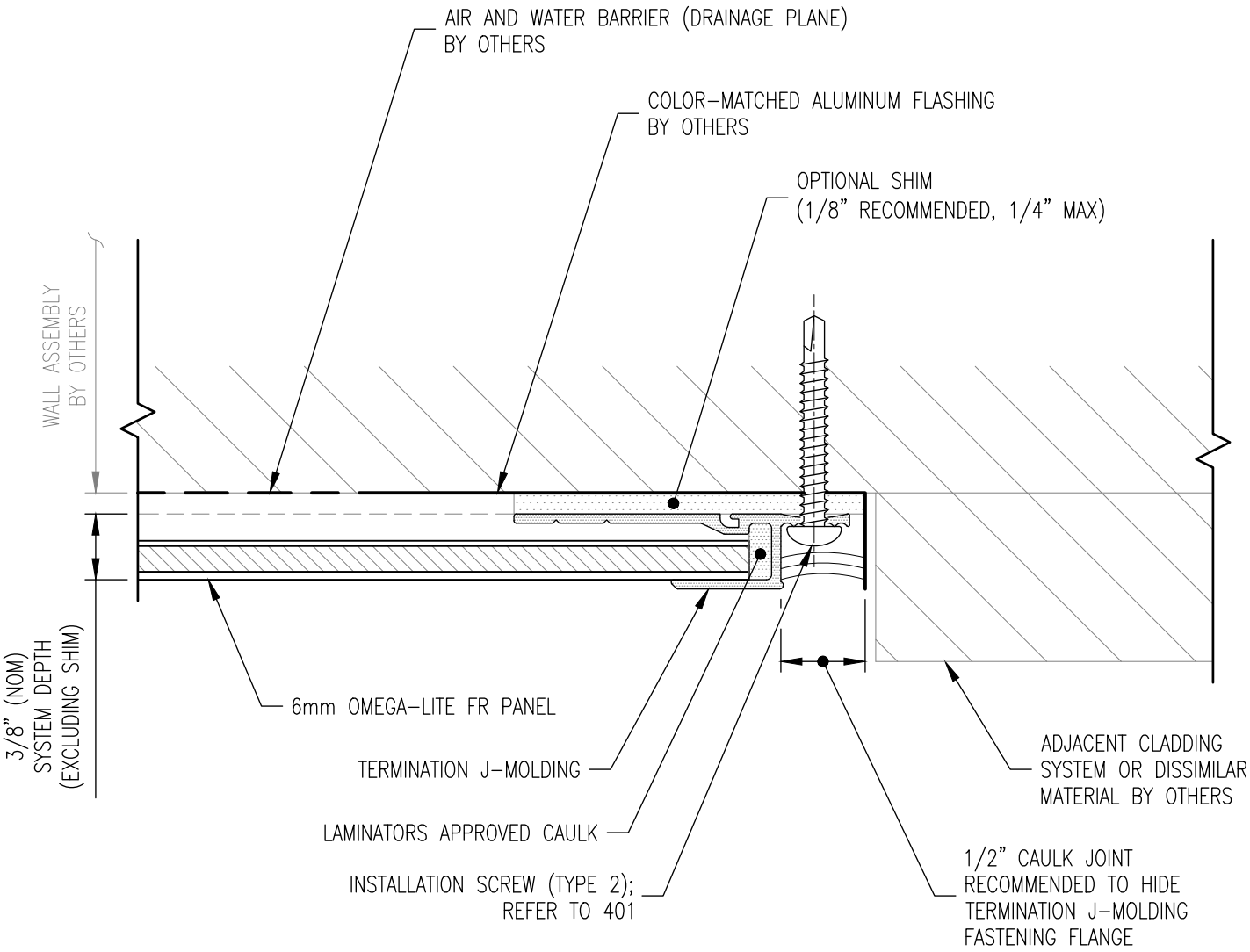

306 PLAN SECTION

LAMINATORS
Composite Panel Solutions

www.LaminatorsInc.com 800.523.2347

RIGHT VERTICAL EDGE DETAIL

ADAPTACLAD TF
DESIGN & INSTALLATION DETAILS

Date:	Drawn By:	Detail Set:	Dwg. No.:	Rev:
10/26/2026	JJM	AC-TF	306	00

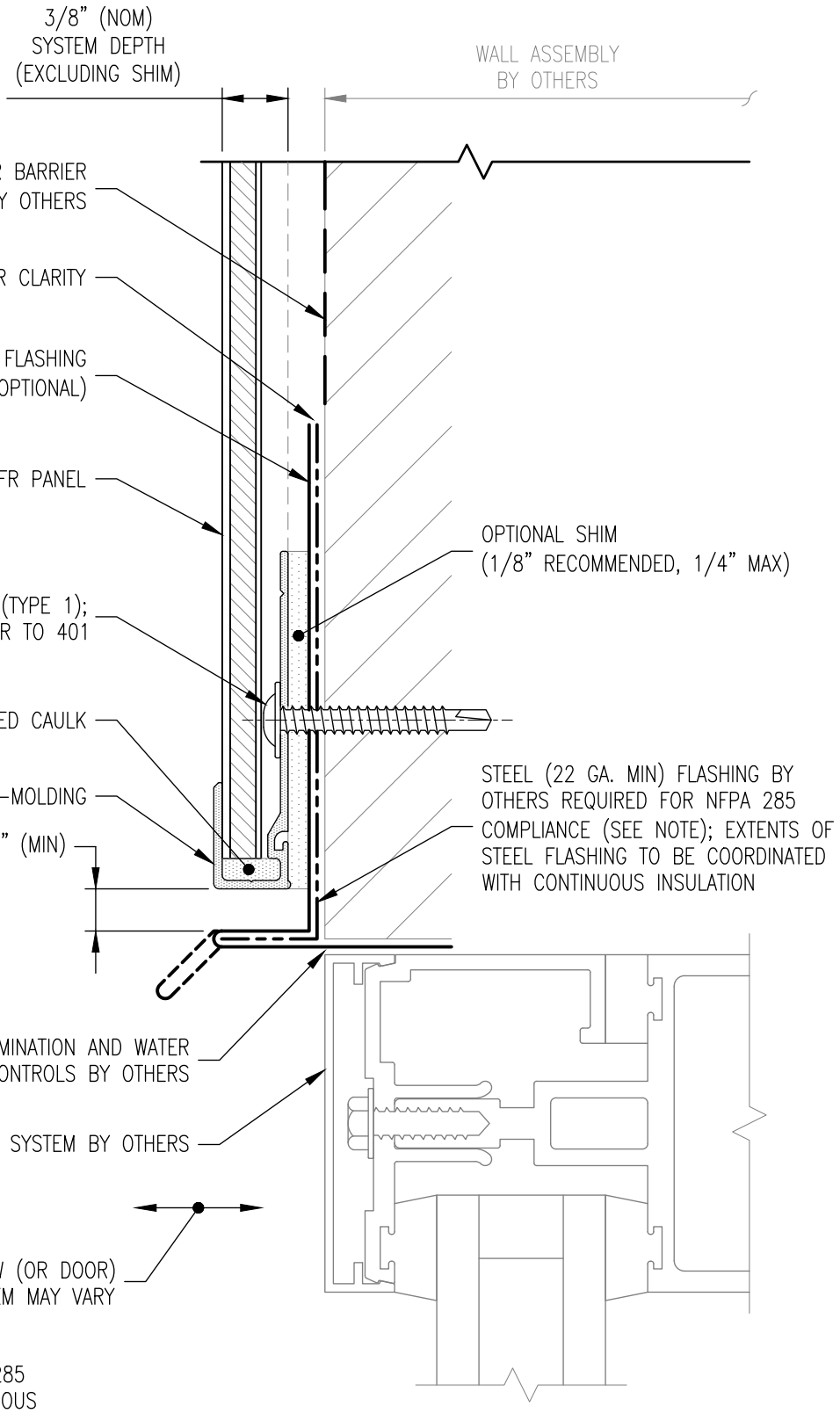

NOTE: ADDITIONAL STEEL FLASHING AT HEAD CONDITIONS IS REQUIRED FOR SOME NFPA 285 COMPLIANT ASSEMBLIES CONTAINING CONTINUOUS INSULATION PRODUCTS (REFER TO 307.A); CONTACT LAMINATORS TECHNICAL SERVICES FOR MORE INFORMATION

307 SECTION

LAMINATORS
Composite Panel Solutions

www.LaminatorsInc.com 800.523.2347

HEAD DETAIL AT OPENING

ADAPTACLAD TF
DESIGN & INSTALLATION DETAILS

Date:	Drawn By:	Detail Set:	Dwg. No.:	Rev:
10/26/2026	JJM	AC-TF	307	00

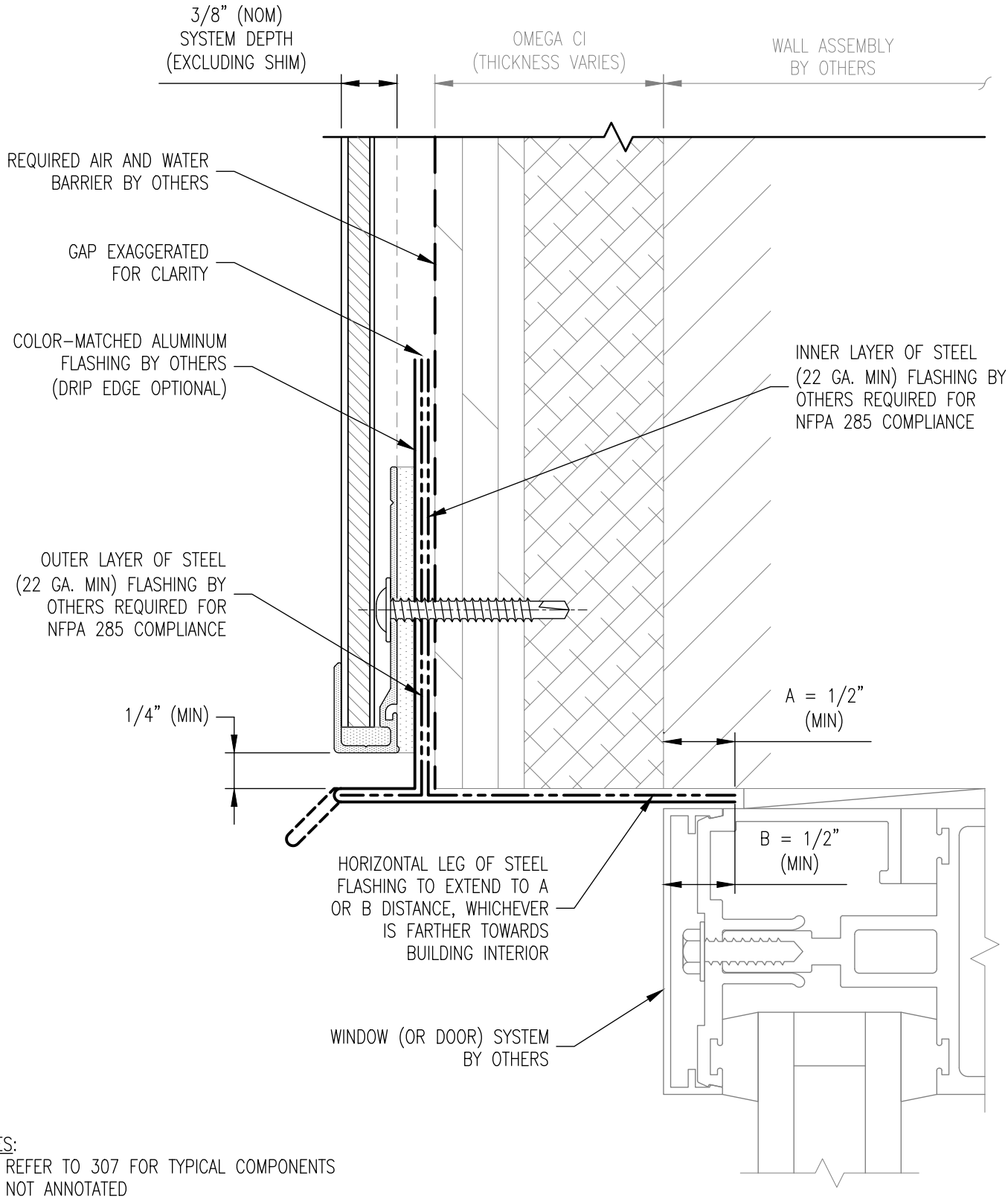

NOTES:

1. REFER TO 307 FOR TYPICAL COMPONENTS NOT ANNOTATED
2. REFER TO EEV AVAILABLE FROM LAMINATORS FOR ALTERNATE COMPLIANT FRT PLYWOOD-FACED RIGID INSULATION PRODUCTS

307.A SECTION

LAMINATORS
Composite Panel Solutions

www.LaminatorsInc.com 800.523.2347

HEAD DETAIL AT OPENING (OMEGA CI)

ADAPTACLAD TF
DESIGN & INSTALLATION DETAILS

Date:	Drawn By:	Detail Set:	Dwg. No.:	Rev:
10/26/2026	JJM	AC-TF	307.A	00

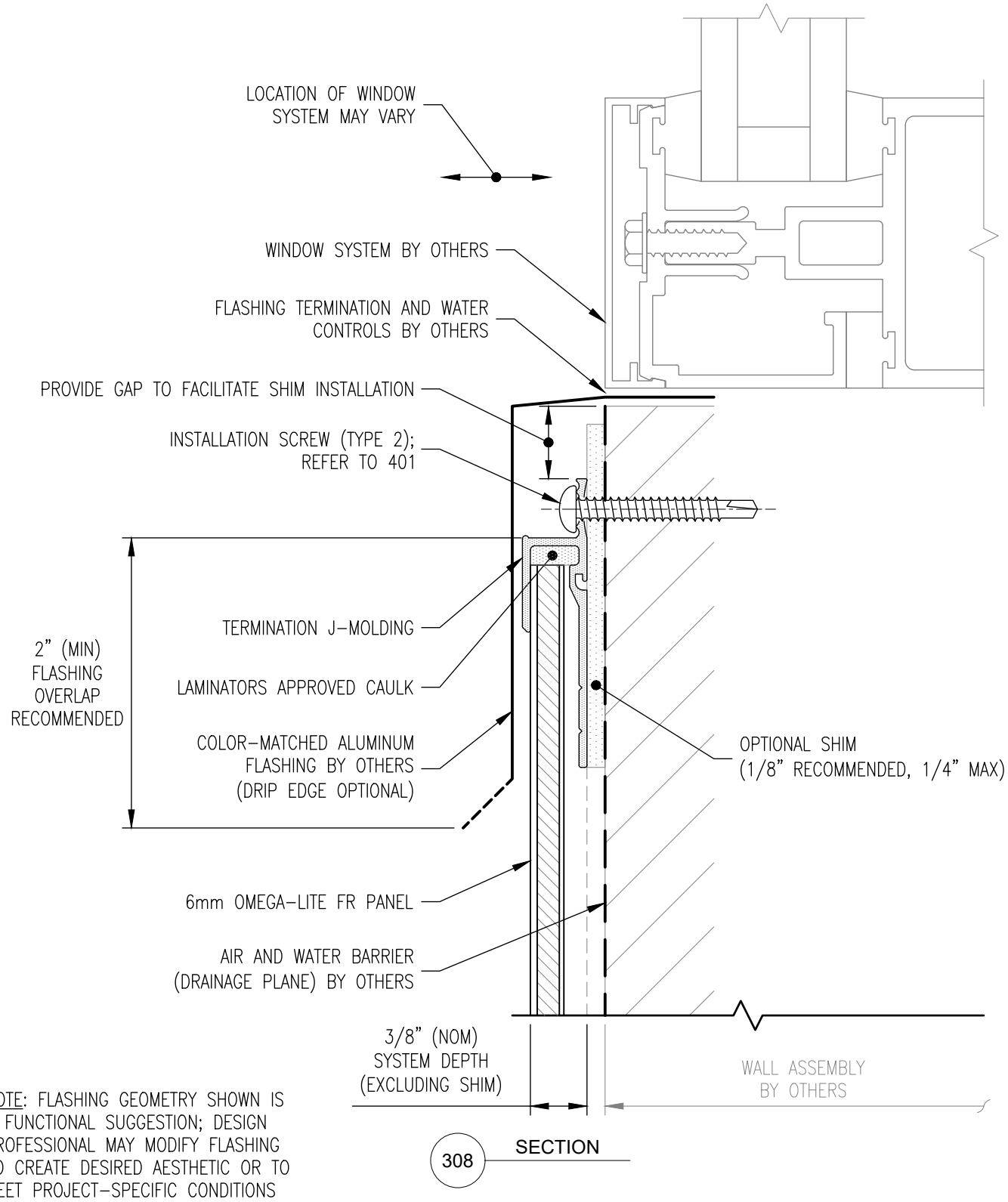

NOTE: FLASHING GEOMETRY SHOWN IS A FUNCTIONAL SUGGESTION; DESIGN PROFESSIONAL MAY MODIFY FLASHING TO CREATE DESIRED AESTHETIC OR TO MEET PROJECT-SPECIFIC CONDITIONS

308 SECTION

LAMINATORS
Composite Panel Solutions

www.LaminatorsInc.com 800.523.2347

SILL DETAIL AT OPENING

ADAPTACLAD TF
DESIGN & INSTALLATION DETAILS

Date:	Drawn By:	Detail Set:	Dwg. No.:	Rev:
10/26/2026	JJM	AC-TF	308	00

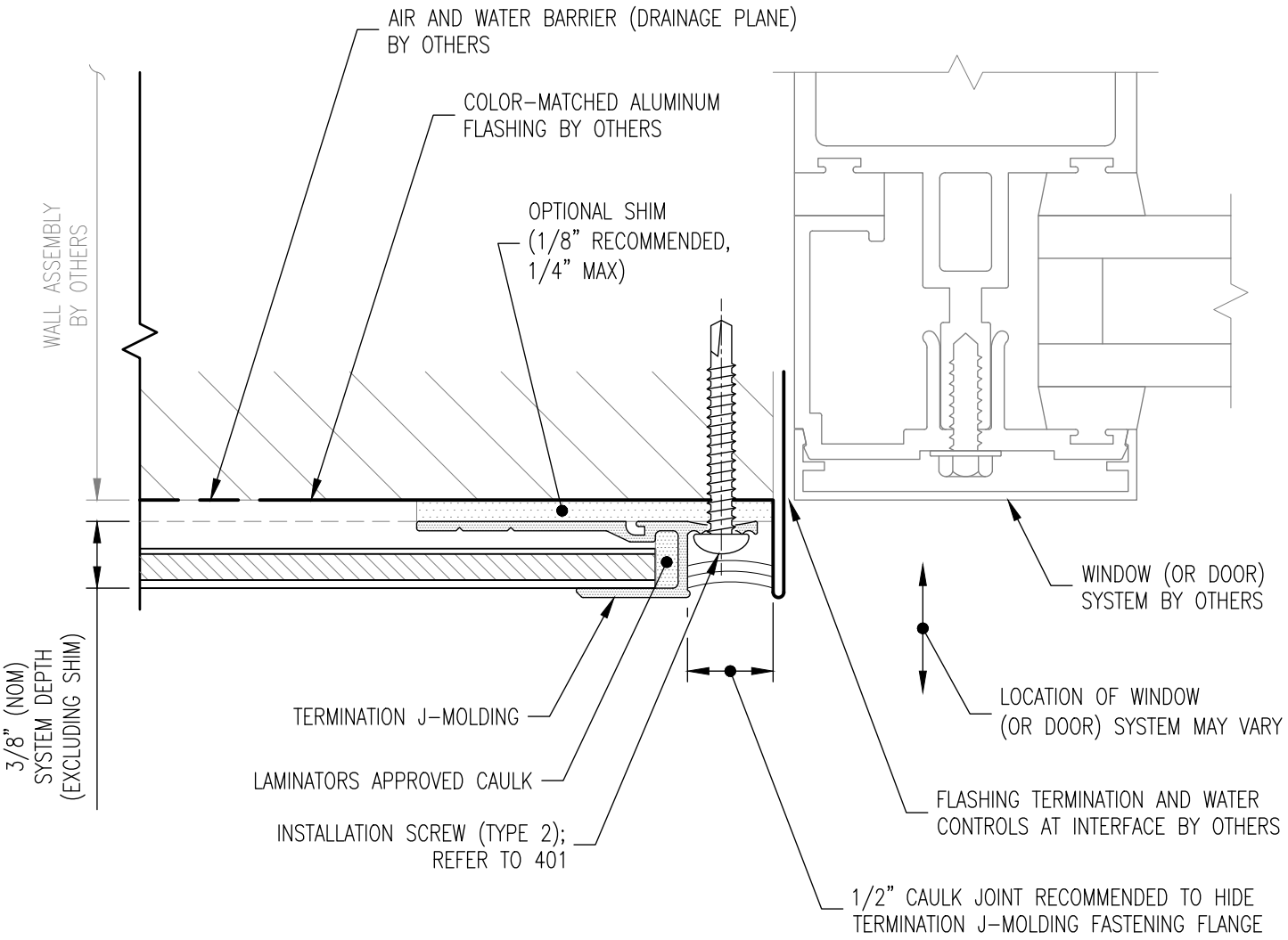

NOTE: STEEL FLASHING AT JAMB CONDITIONS IS REQUIRED FOR SOME NFPA 285 COMPLIANT ASSEMBLIES CONTAINING CONTINUOUS INSULATION PRODUCTS (REFER TO 309.A); CONTACT LAMINATORS TECHNICAL SERVICES FOR MORE INFORMATION

309 PLAN SECTION

NOTE: FLASHING GEOMETRY SHOWN IS A FUNCTIONAL SUGGESTION; DESIGN PROFESSIONAL MAY MODIFY FLASHING TO CREATE DESIRED AESTHETIC OR TO MEET PROJECT–SPECIFIC CONDITIONS

LAMINATORS
Composite Panel Solutions

www.LaminatorsInc.com 800.523.2347

LEFT JAMB DETAIL AT OPENING

ADAPTACLAD TF
DESIGN & INSTALLATION DETAILS

Date:	Drawn By:	Detail Set:	Dwg. No.:	Rev:
10/26/2026	JJM	AC-TF	309	00

LEFT JAMB CONDITION SHOWN;
RIGHT JAMB CONDITION SIMILAR

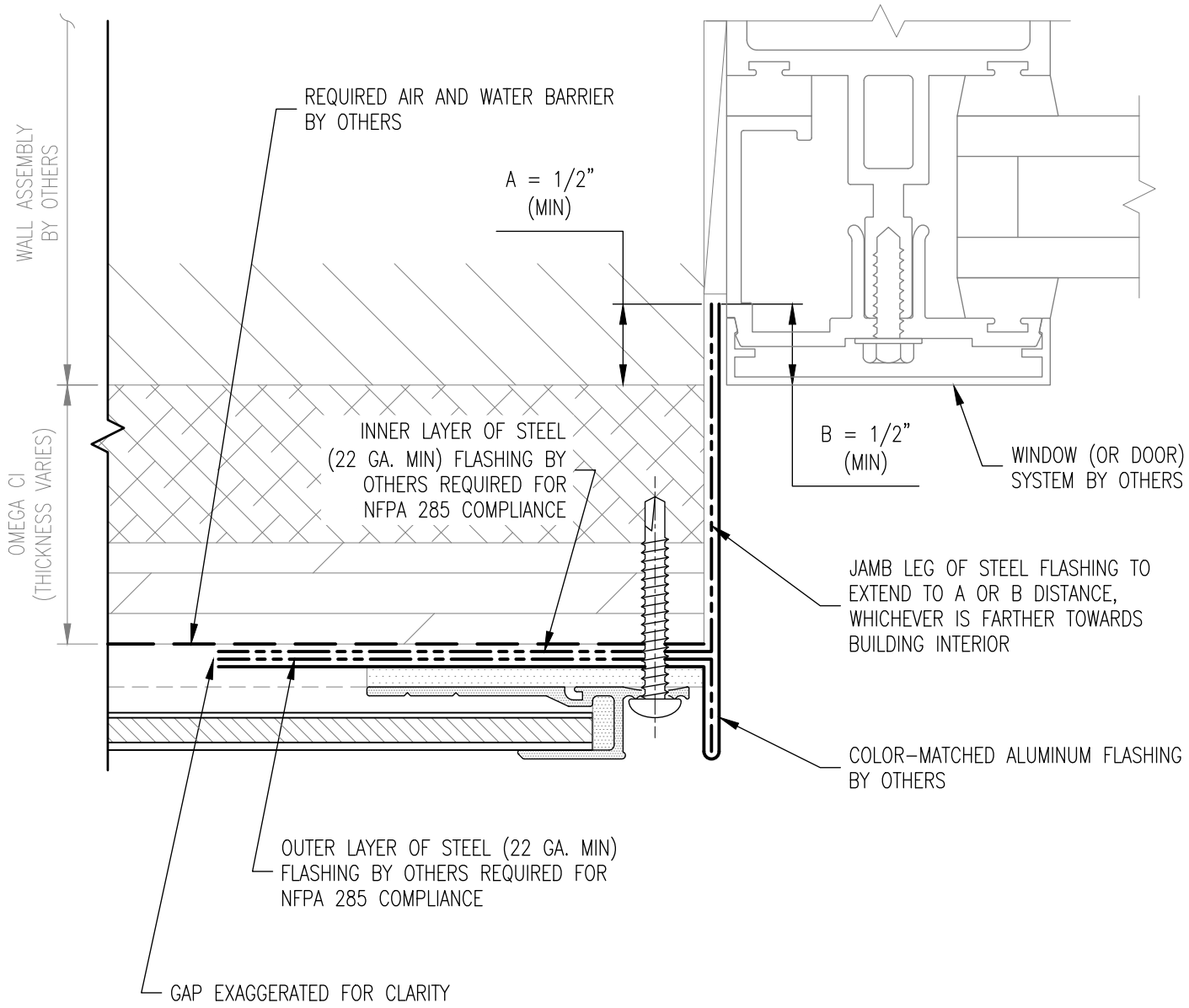

NOTES:
1. REFER TO 309 FOR TYPICAL COMPONENTS NOT ANNOTATED
2. REFER TO EEV AVAILABLE FROM LAMINATORS FOR ALTERNATE COMPLIANT FRT PLYWOOD-FACED RIGID INSULATION PRODUCTS

309.A PLAN SECTION

LAMINATORS
Composite Panel Solutions

www.LaminatorsInc.com 800.523.2347

LEFT JAMB DETAIL AT OPENING (OMEGA CI)

ADAPTACLAD TF
DESIGN & INSTALLATION DETAILS

Date:	Drawn By:	Detail Set:	Dwg. No.:	Rev:
10/26/2026	JJM	AC-TF	309.A	00

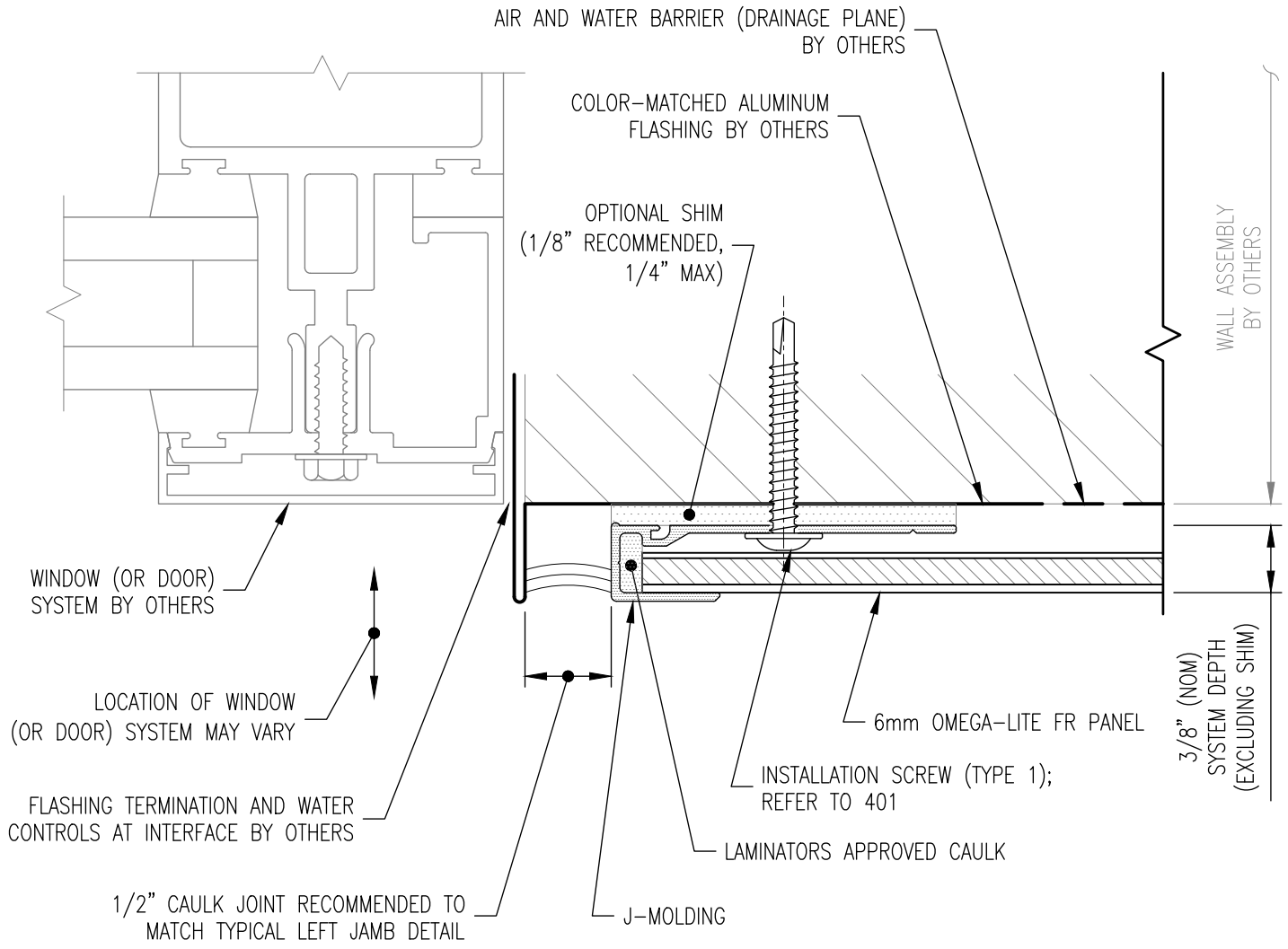

NOTE: STEEL FLASHING AT JAMB CONDITIONS IS REQUIRED FOR SOME NFPA 285 COMPLIANT ASSEMBLIES CONTAINING CONTINUOUS INSULATION PRODUCTS (REFER TO 309.A); CONTACT LAMINATORS TECHNICAL SERVICES FOR MORE INFORMATION

310 PLAN SECTION

NOTE: FLASHING GEOMETRY SHOWN IS A FUNCTIONAL SUGGESTION; DESIGN PROFESSIONAL MAY MODIFY FLASHING TO CREATE DESIRED AESTHETIC OR TO MEET PROJECT–SPECIFIC CONDITIONS

LAMINATORS
Composite Panel Solutions

www.LaminatorsInc.com 800.523.2347

RIGHT JAMB DETAIL AT OPENING

ADAPTACLAD TF
DESIGN & INSTALLATION DETAILS

Date:	Drawn By:	Detail Set:	Dwg. No.:	Rev:
10/26/2026	JJM	AC-TF	310	00

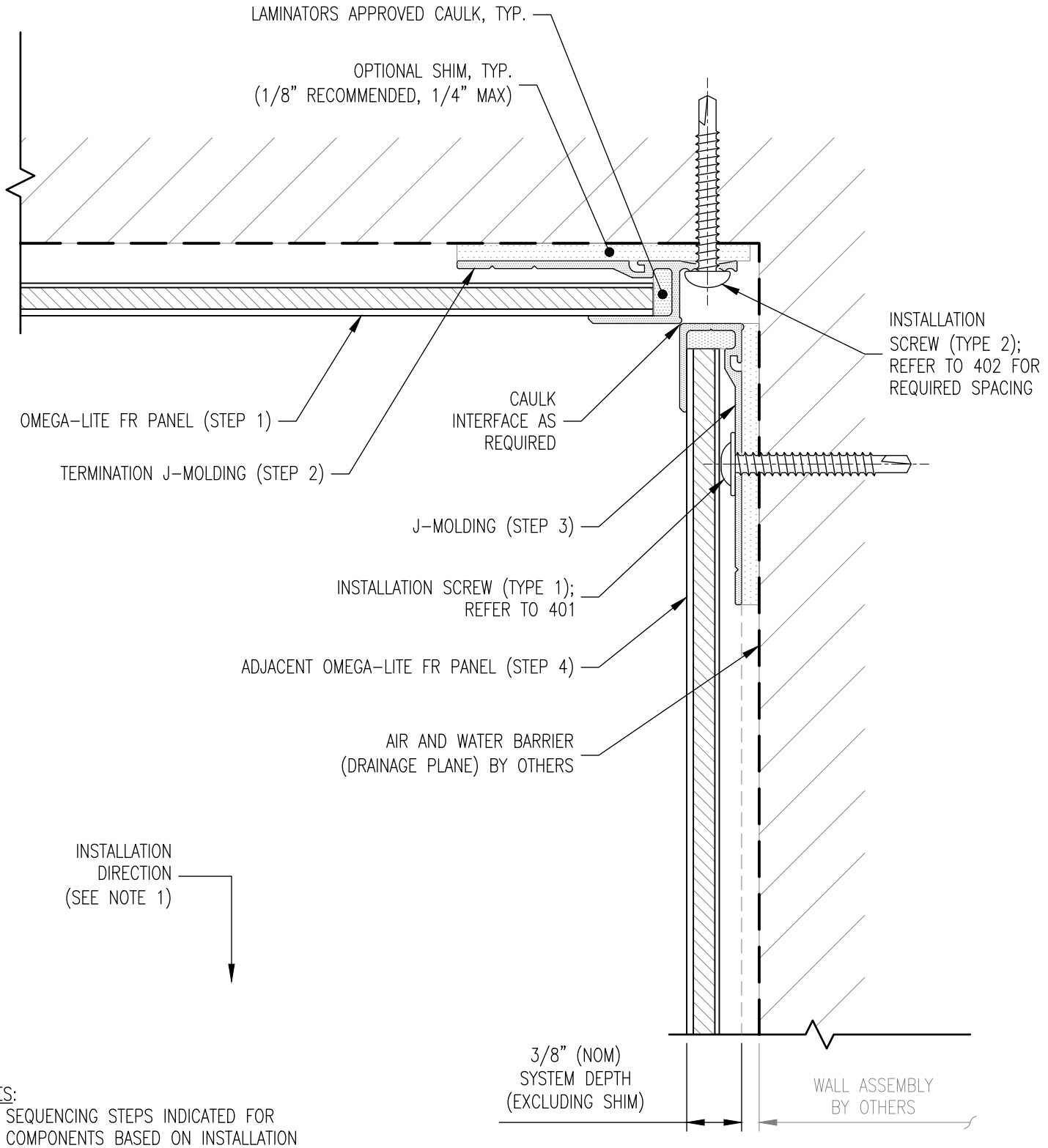

NOTES:
1. SEQUENCING STEPS INDICATED FOR COMPONENTS BASED ON INSTALLATION DIRECTION SHOWN
2. REFER TO 311.A FOR ALTERNATE DETAIL OPTION

311 PLAN SECTION

LAMINATORS
Composite Panel Solutions

www.LaminatorsInc.com 800.523.2347

INSIDE CORNER DETAIL

ADAPTACLAD TF
DESIGN & INSTALLATION DETAILS

Date:	Drawn By:	Detail Set:	Dwg. No.:	Rev:
10/26/2026	JJM	AC-TF	311	00

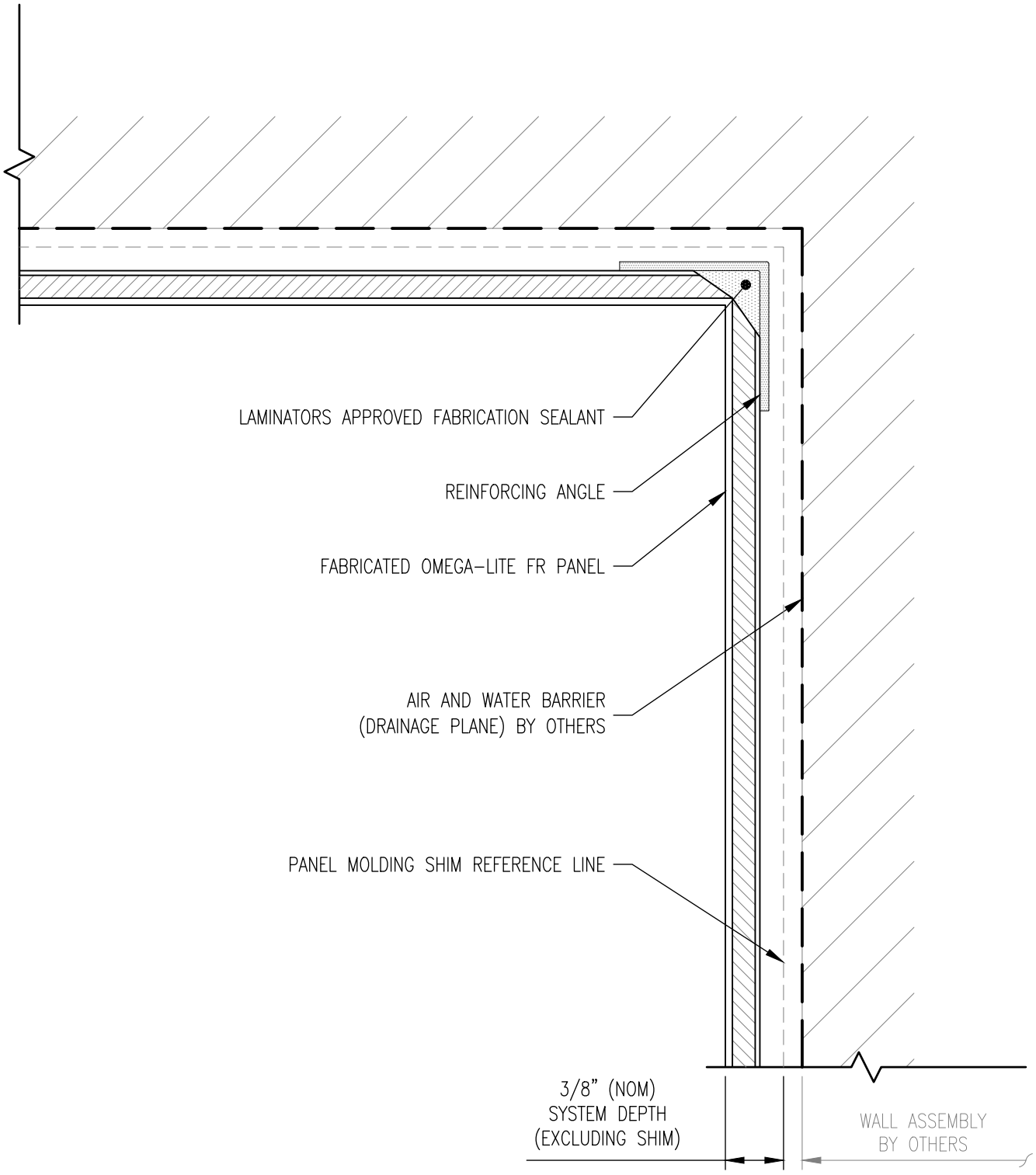

311.A PLAN SECTION

NOTE: REFER TO 503 FOR FABRICATED PANEL CORNER REINFORCING REQUIREMENTS

LAMINATORS
Composite Panel Solutions

www.LaminatorsInc.com 800.523.2347

INSIDE CORNER DETAIL (FABRICATED PANEL)

ADAPTACLAD TF
DESIGN & INSTALLATION DETAILS

Date:	Drawn By:	Detail Set:	Dwg. No.:	Rev:
10/26/2026	JJM	AC-TF	311.A	00

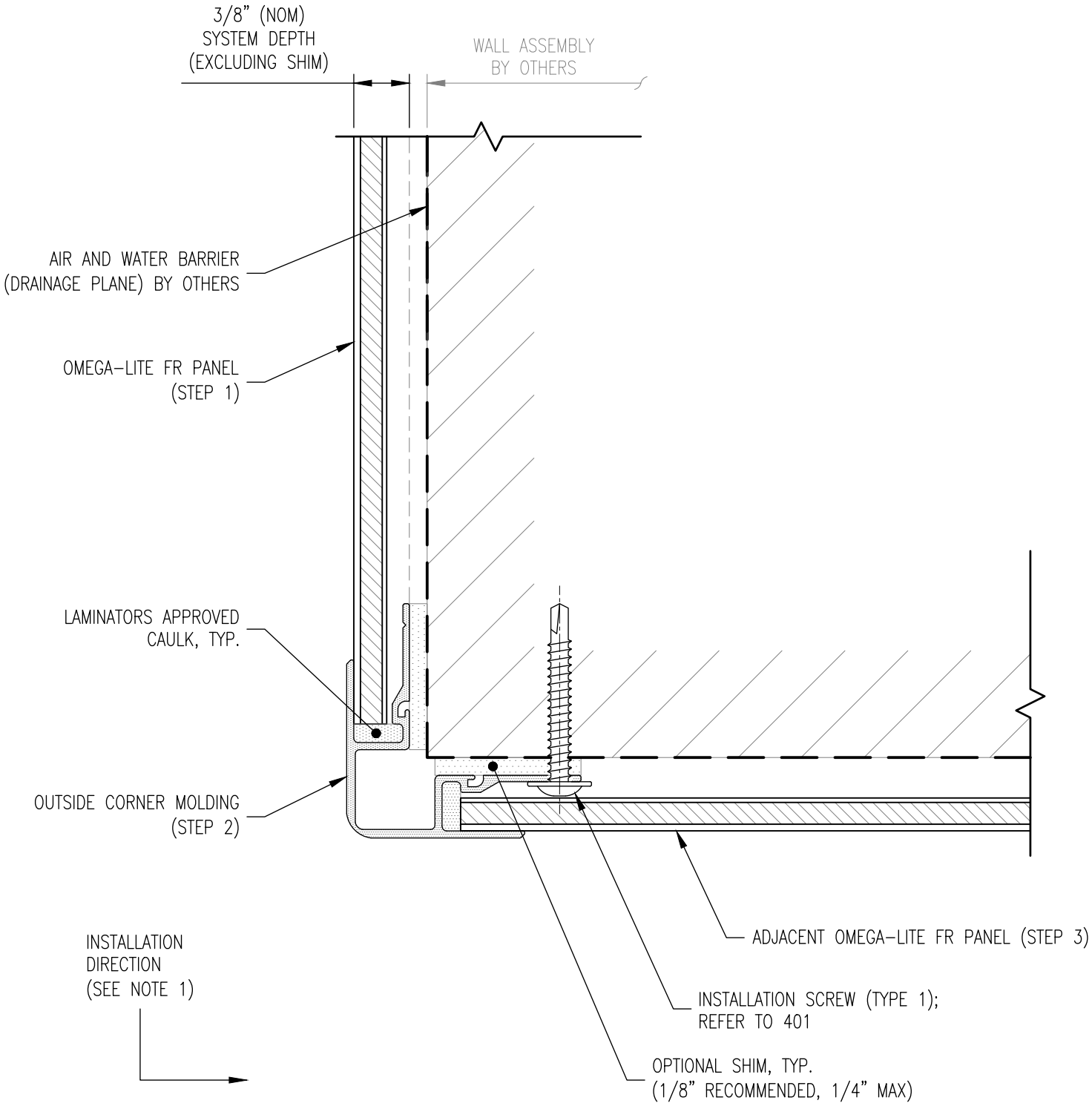

NOTES:
1. SEQUENCING STEPS INDICATED FOR COMPONENTS BASED ON INSTALLATION DIRECTION SHOWN
2. REFER TO 312.A FOR ALTERNATE DETAIL OPTION

312 PLAN SECTION

LAMINATORS
Composite Panel Solutions

www.LaminatorsInc.com 800.523.2347

OUTSIDE CORNER DETAIL

ADAPTACLAD TF
DESIGN & INSTALLATION DETAILS

Date:	Drawn By:	Detail Set:	Dwg. No.:	Rev:
10/26/2026	JJM	AC-TF	312	00

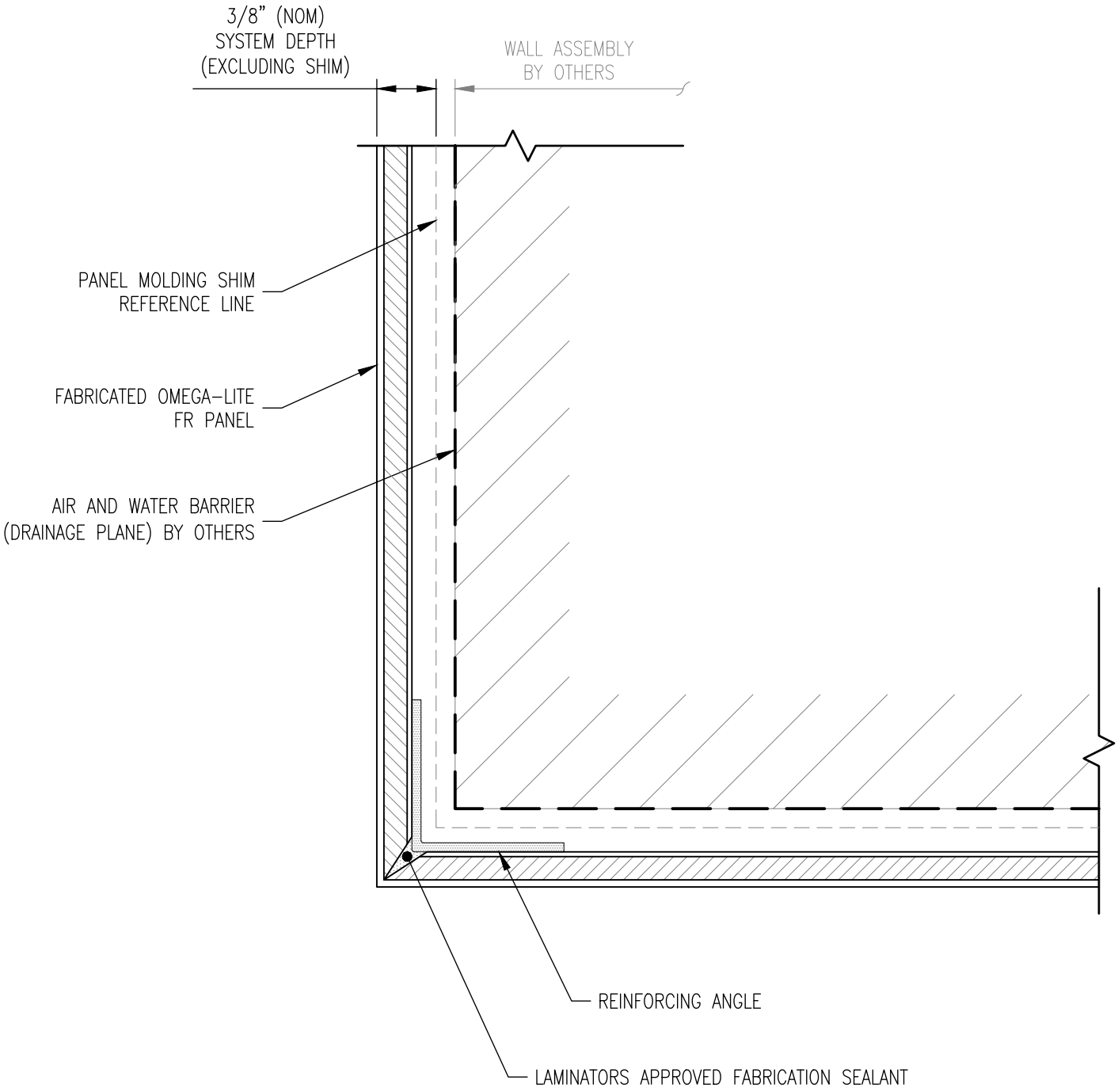

312.A PLAN SECTION

NOTE: REFER TO 503 FOR FABRICATED PANEL CORNER REINFORCING REQUIREMENTS

LAMINATORS
Composite Panel Solutions

www.LaminatorsInc.com 800.523.2347

OUTSIDE CORNER DETAIL (FABRICATED PANEL)

ADAPTACLAD TF
DESIGN & INSTALLATION DETAILS

Date:	Drawn By:	Detail Set:	Dwg. No.:	Rev:
10/26/2026	JJM	AC-TF	312.A	00

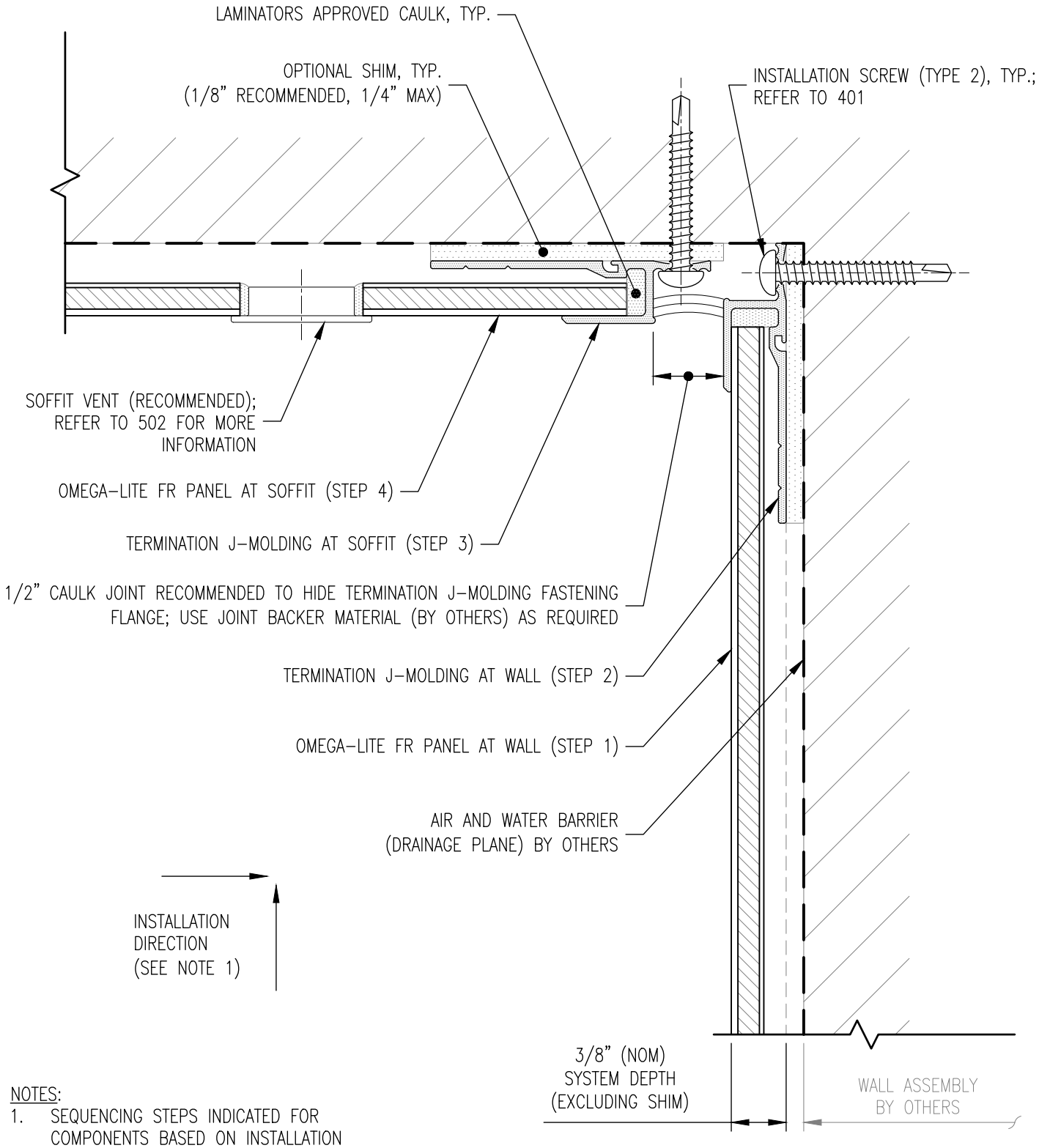

NOTES:
1. SEQUENCING STEPS INDICATED FOR COMPONENTS BASED ON INSTALLATION DIRECTION SHOWN
2. REFER TO 313.A FOR ALTERNATE DETAIL OPTION

313 SECTION

LAMINATORS
Composite Panel Solutions

www.LaminatorsInc.com 800.523.2347

SOFFIT-TO-WALL TRANSITION DETAIL (DOUBLE TERM J-MOLDING)

ADAPTACLAD TF
DESIGN & INSTALLATION DETAILS

Date:	Drawn By:	Detail Set:	Dwg. No.:	Rev:
10/26/2026	JJM	AC-TF	313	00

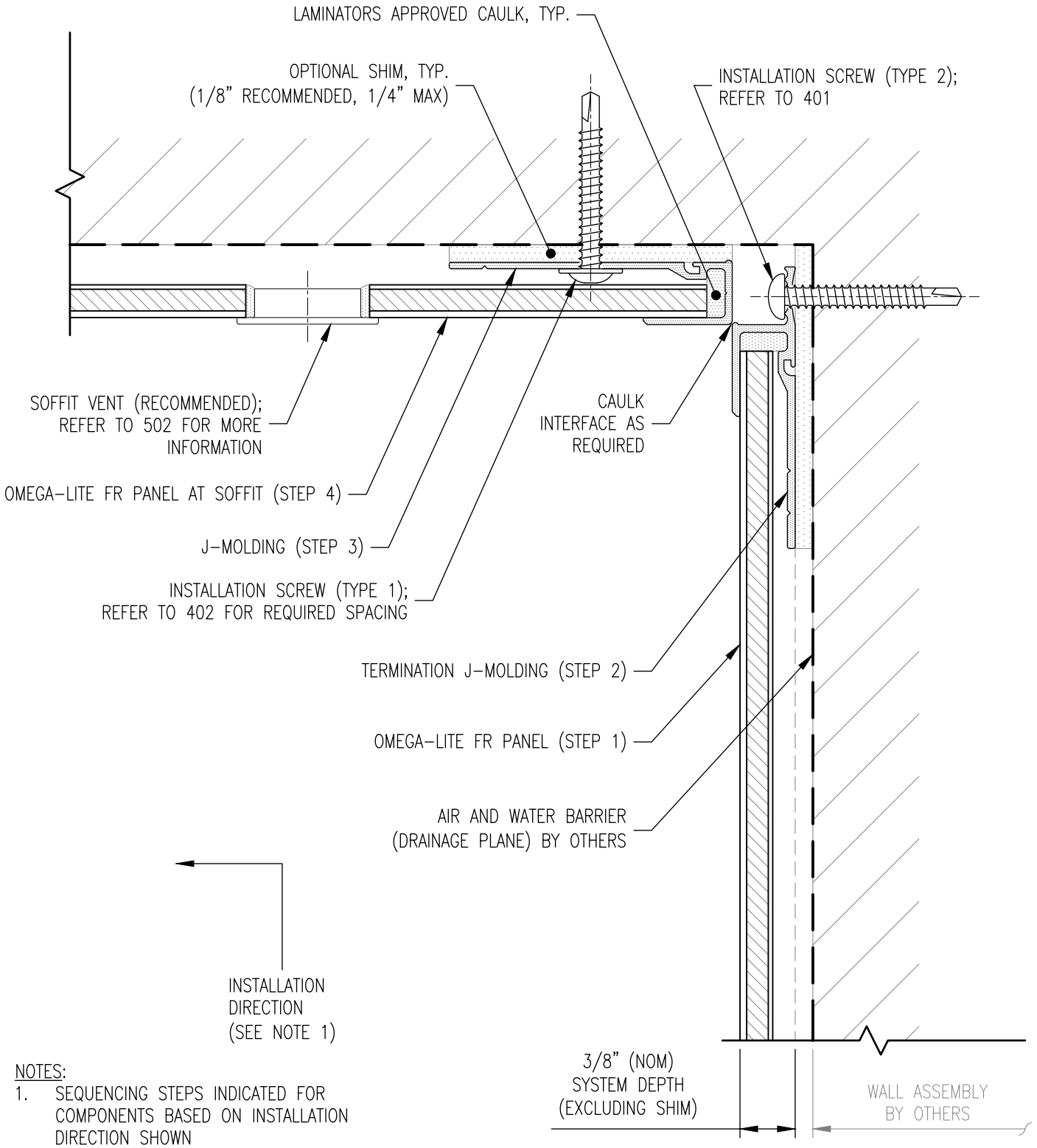

NOTES:

1. SEQUENCING STEPS INDICATED FOR COMPONENTS BASED ON INSTALLATION DIRECTION SHOWN
2. DETAIL CANNOT BE USED WITH DOUBLE J-MOLDING FASCIA-TO-SOFFIT TRANSITION (DETAIL 314)

313.A SECTION

LAMINATORS
Composite Panel Solutions

www.LaminatorsInc.com 800.523.2347

SOFFIT-TO-WALL TRANSITION DETAIL (J- & TERM J-MOLDING)

ADAPTACLAD TF

DESIGN & INSTALLATION DETAILS

Date:	Drawn By:	Detail Set:	Dwg. No.:	Rev:
10/26/2026	JJM	AC-TF	313.A	00

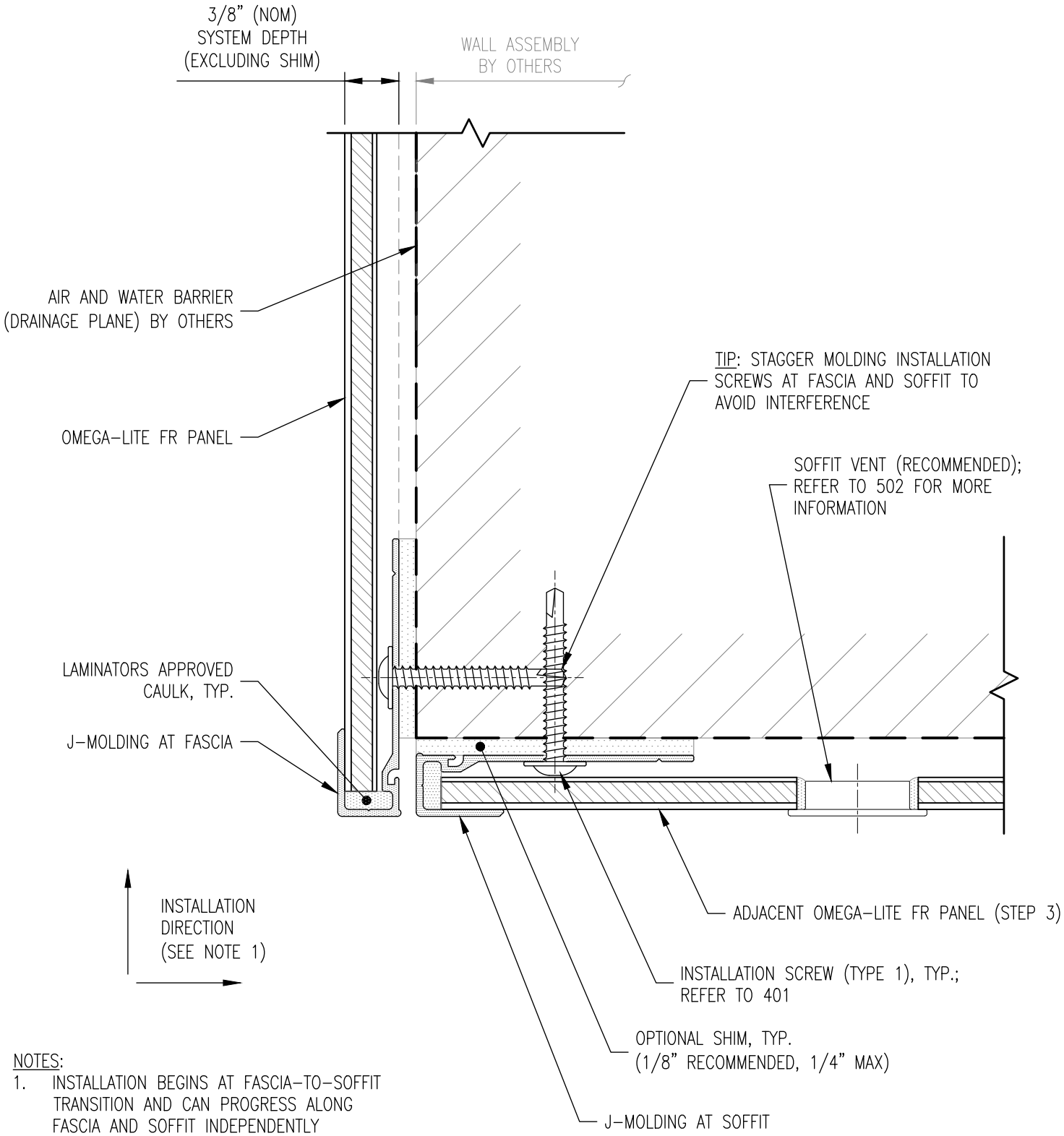

NOTES:

1. INSTALLATION BEGINS AT FASCIA-TO-SOFFIT TRANSITION AND CAN PROGRESS ALONG FASCIA AND SOFFIT INDEPENDENTLY
2. REFER TO 314.A FOR ALTERNATE DETAIL OPTION
3. DETAIL REQUIRES DOUBLE TERM J-MOLDING SOFFIT-TO-WALL TRANSITION (DETAIL 313)

314 SECTION

LAMINATORS
Composite Panel Solutions

www.LaminatorsInc.com 800.523.2347

FASCIA-TO-SOFFIT TRANSITION DETAIL (DOUBLE J-MOLDING)

ADAPTACLAD TF
DESIGN & INSTALLATION DETAILS

Date:	Drawn By:	Detail Set:	Dwg. No.:	Rev:
10/26/2026	JJM	AC-TF	314	00

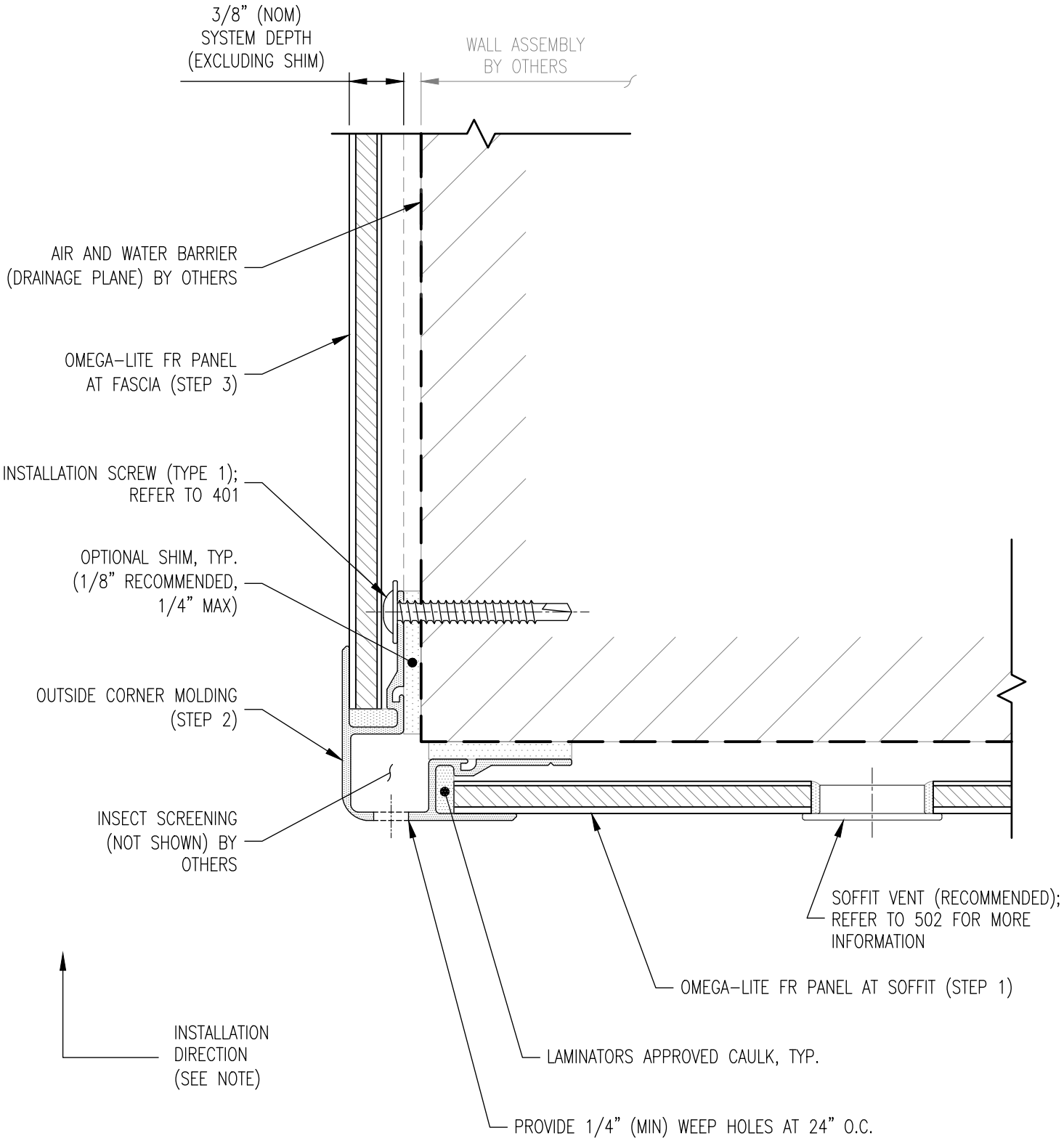

NOTE: SEQUENCING STEPS INDICATED FOR COMPONENTS BASED ON INSTALLATION DIRECTION SHOWN

314.A SECTION

LAMINATORS
Composite Panel Solutions

www.LaminatorsInc.com 800.523.2347

FASCIA-TO-SOFFIT TRANSITION DETAIL (CORNER MOLDING)

ADAPTACLAD TF
DESIGN & INSTALLATION DETAILS

Date:	Drawn By:	Detail Set:	Dwg. No.:	Rev:
10/26/2026	JJM	AC-TF	314.A	00

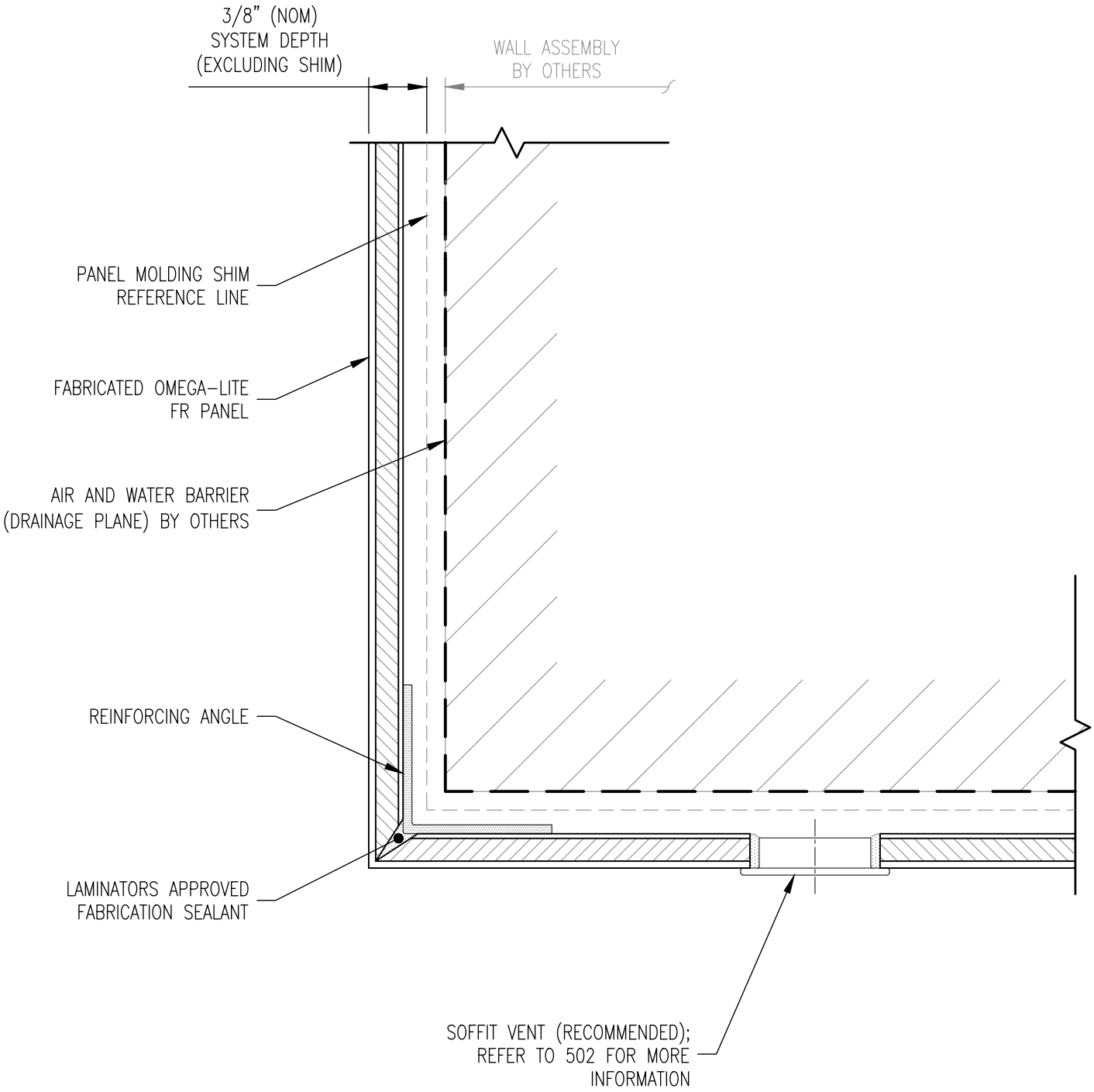

314.B SECTION

NOTE: REFER TO 503 FOR FABRICATED PANEL CORNER REINFORCING REQUIREMENTS

LAMINATORS
Composite Panel Solutions

www.LaminatorsInc.com 800.523.2347

FASCIA-TO-SOFFIT TRANSITION DETAIL (FABRICATED PANEL)

ADAPTACLAD TF
DESIGN & INSTALLATION DETAILS

Date:	Drawn By:	Detail Set:	Dwg. No.:	Rev:
10/26/2026	JJM	AC-TF	314.B	00

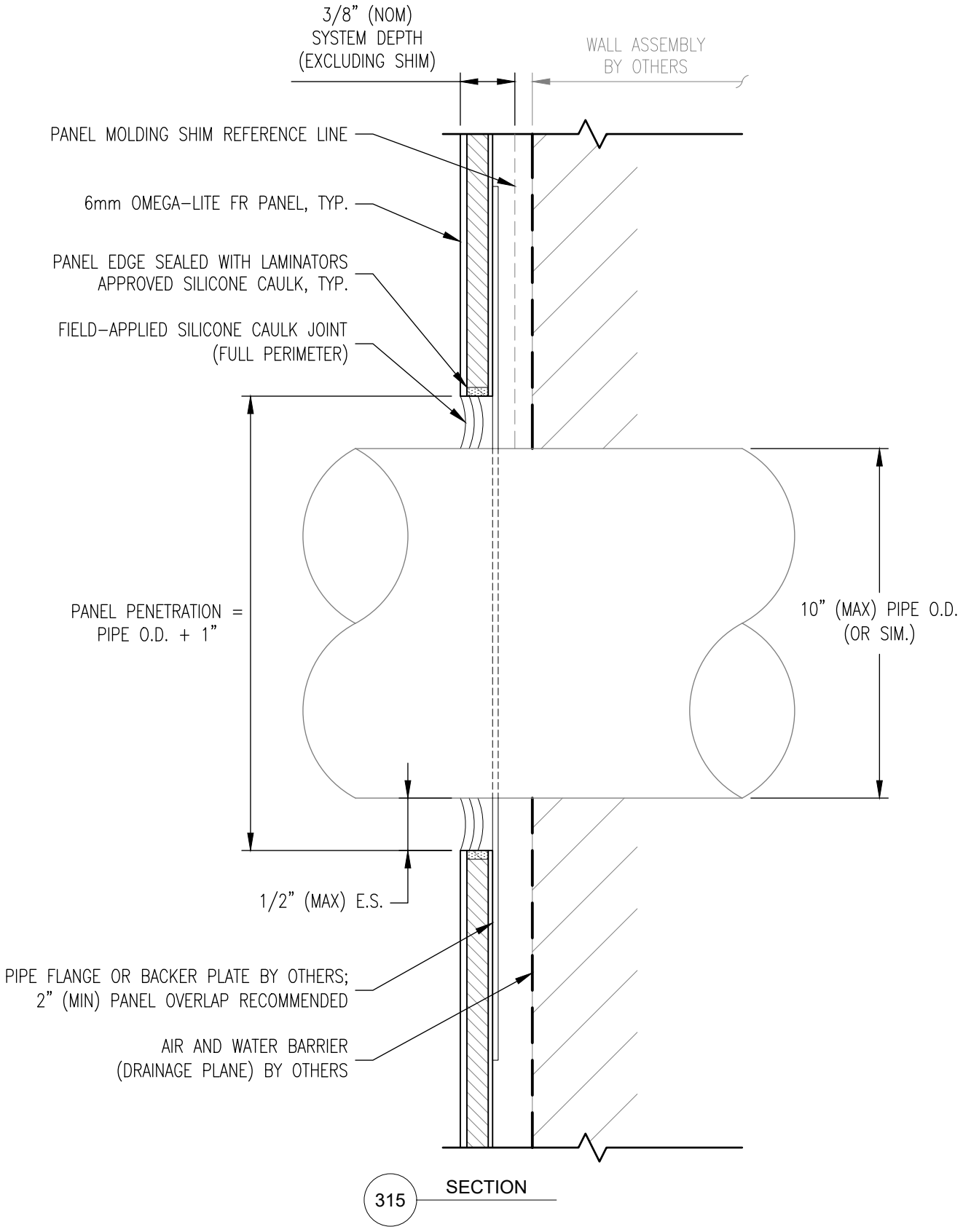

315 SECTION

LAMINATORS
Composite Panel Solutions

www.LaminatorsInc.com 800.523.2347

PANEL PENETRATION DETAIL

ADAPTACLAD TF
DESIGN & INSTALLATION DETAILS

Date:	Drawn By:	Detail Set:	Dwg. No.:	Rev:
10/26/2026	JJM	AC-TF	315	00

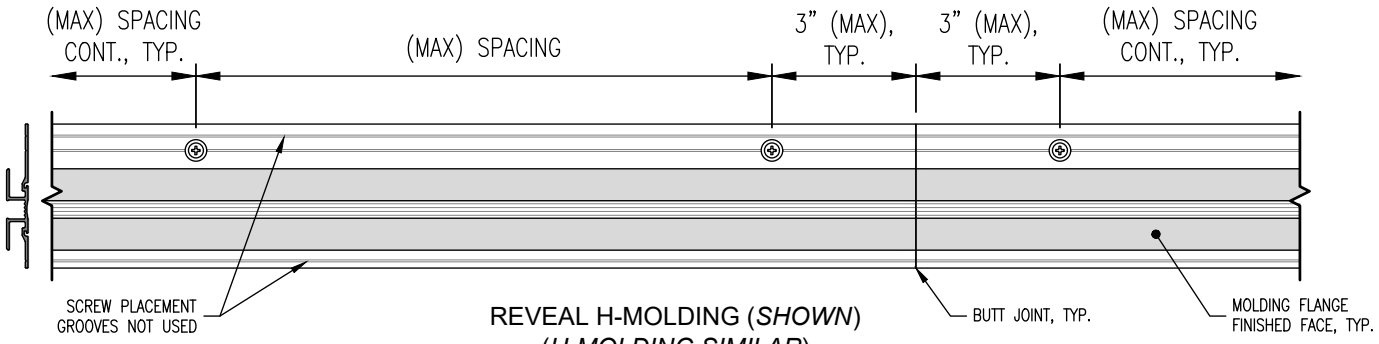

REVEAL H-MOLDING (*SHOWN*)
(*H-MOLDING SIMILAR*)

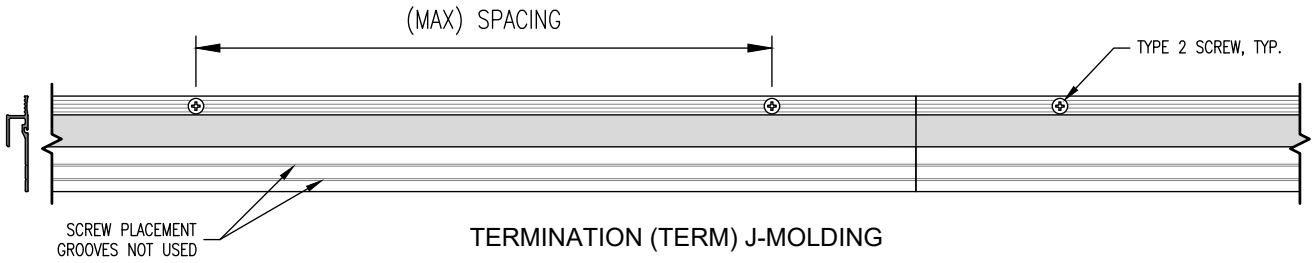

TERMINATION (TERM) J-MOLDING

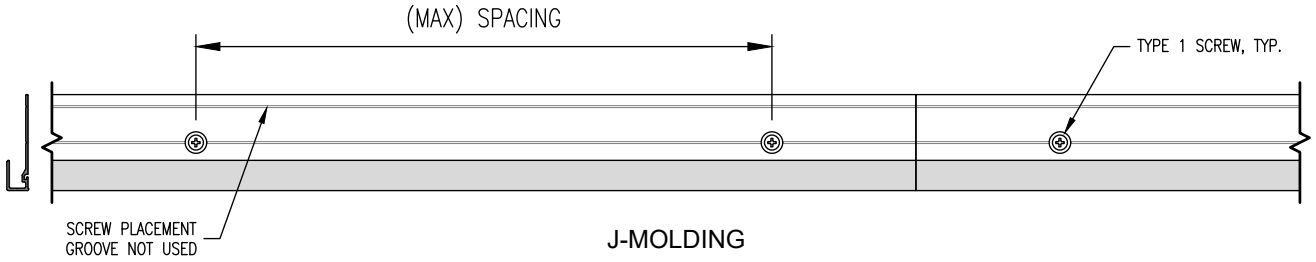

J-MOLDING

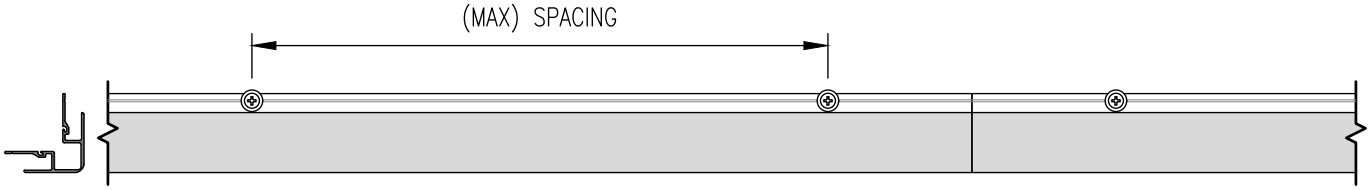

OUTSIDE CORNER (OC) MOLDING
(*VIEW FROM ONE SIDE*)

TABLE 401: MOLDING SCREWS			
MOLDING	SCREW TYPE	DESCRIPTION	PART NO.
REVEAL H-, H-, J-, OC	TYPE 1	#8 X 1-1/4" PMTH	13010
TERM J-	TYPE 2	#8 X 1-1/4" PPH	13011

NOTE: TYPE 1 AND TYPE 2 SCREWS NOT PERMITTED FOR ATTACHMENT TO MAGNESIUM OXIDE (MgO) STRUCTURAL INSULATED SHEATHING (SIS); REFER TO MgO SIS MANUFACTURER FOR SPECIFIC FASTENER RECOMMENDATIONS

REFER TO APPLICABLE SUBSTRATE LAYOUT (402 THRU 404) FOR MAX SCREW SPACING

TYPE 1

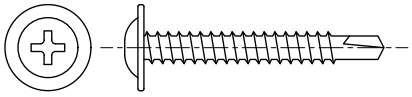

#8 PHILLIPS MODIFIED TRUSS HEAD (PMTH)

TYPE 2

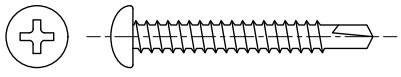

#8 PHILLIPS PAN HEAD (PPH)

LAMINATORS
Composite Panel Solutions

www.LaminatorsInc.com 800.523.2347

MOLDING SCREW TYPE & PLACEMENT

ADAPTACLAD TF
DESIGN & INSTALLATION DETAILS

Date:	Drawn By:	Detail Set:	Dwg. No.:	Rev:
11/2/2026	JJM	AC-TF	401	01

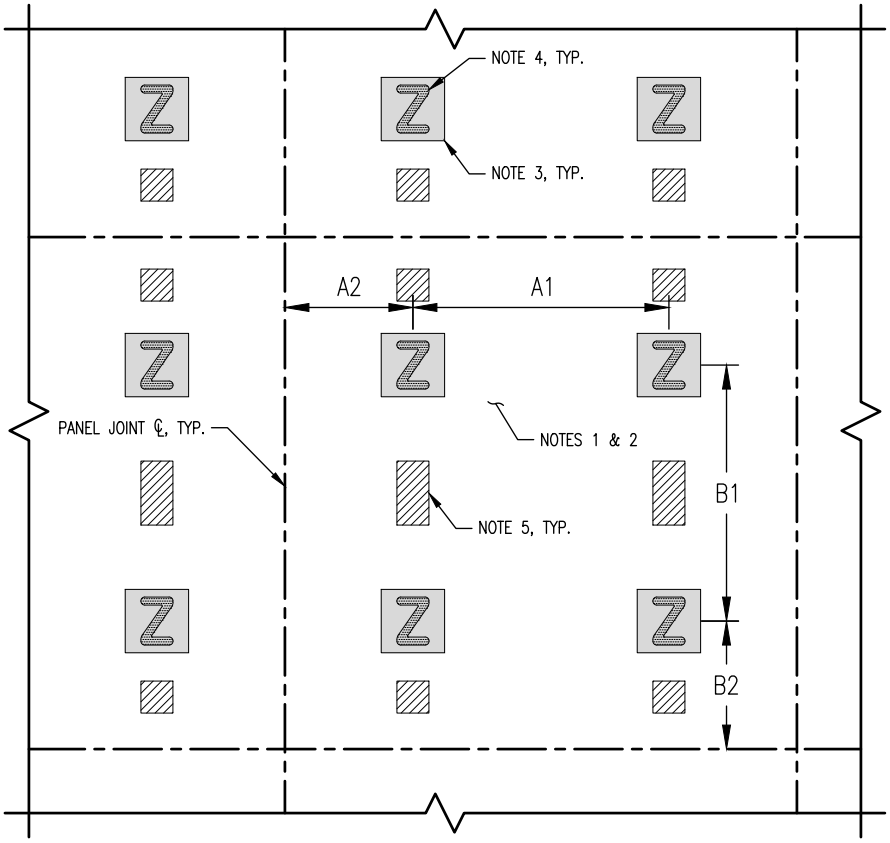

402 PARTIAL ELEVATION
CONTINUOUS (NAILABLE) SUBSTRATES

LAYOUT APPLIES TO LANDSCAPE AND PORTRAIT PANELS

NOTES:

1. CONTINUOUS (NAILABLE) SUBSTRATE WITH AIR AND WATER BARRIER BY OTHERS
2. SUBSTRATE MINIMUM CRITERIA:
   - OMEGA CI: 5/8"
   - PLYWOOD: 15/32" (1/2" NOM)
   - OSB: 19/32" (5/8" NOM)
   - OSB (ZIP): 7/16"
3. 4" X 4", 18 GA. STEEL PLATE (PART NO. 41ACTF–PLATE) FASTENED TO SUBSTRATE USING (3) TYPE 1 SCREWS
4. 1/2" (MIN) DIA. BEAD OF LAMINATORS APPROVED PANEL ADHESIVE APPLIED TO STEEL PLATE IN 2" X 3" Z–FORMATION (SEE BELOW);
5. FOAM TAPE STRIPS (3/16" X 2" TO 4" LONG) APPLIED BETWEEN ADHESIVE LOCATIONS TO MAINTAIN ADHESIVE BOND LINE THICKNESS

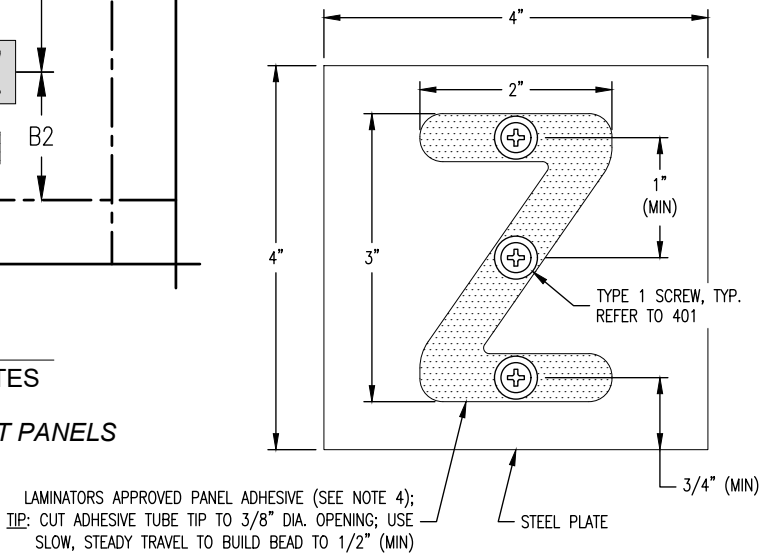

TABLE 402: LAYOUT REQUIREMENTS
CONTINUOUS (NAILABLE) SUBSTRATES

SUBSTRATE	STRUCTURAL CAPACITY (PSF) [ASD]	PANEL ADHESIVE MAXIMUM SPACING (INCHES)				MOLDING SCREW MAXIMUM SPACING (INCHES)
		LANDSCAPE PANEL - HORIZONTAL PORTRAIT PANEL - VERTICAL		*LANDSCAPE PANEL - VERTICAL PORTRAIT PANEL - HORIZONTAL*		
		Z to Z (A1)	Z to JOINT (A2)	Z to Z (B1)	Z to JOINT (B2)	
OMEGA CI (5/8") PLYWOOD (15/32") OSB (19/32")	40	24	16	16	16	12
	60	16	12	16	12	
OSB (7/16")	40	24	16	16	16	
	60	16	12	16	12	10

LAMINATORS
Composite Panel Solutions

www.LaminatorsInc.com 800.523.2347

LAYOUT REQUIREMENTS - CONTINUOUS (NAILABLE) SUBSTRATES

ADAPTACLAD TF
DESIGN & INSTALLATION DETAILS

Date:	Drawn By:	Detail Set:	Dwg. No.:	Rev:
11/2/2026	JJM	AC-TF	402	01

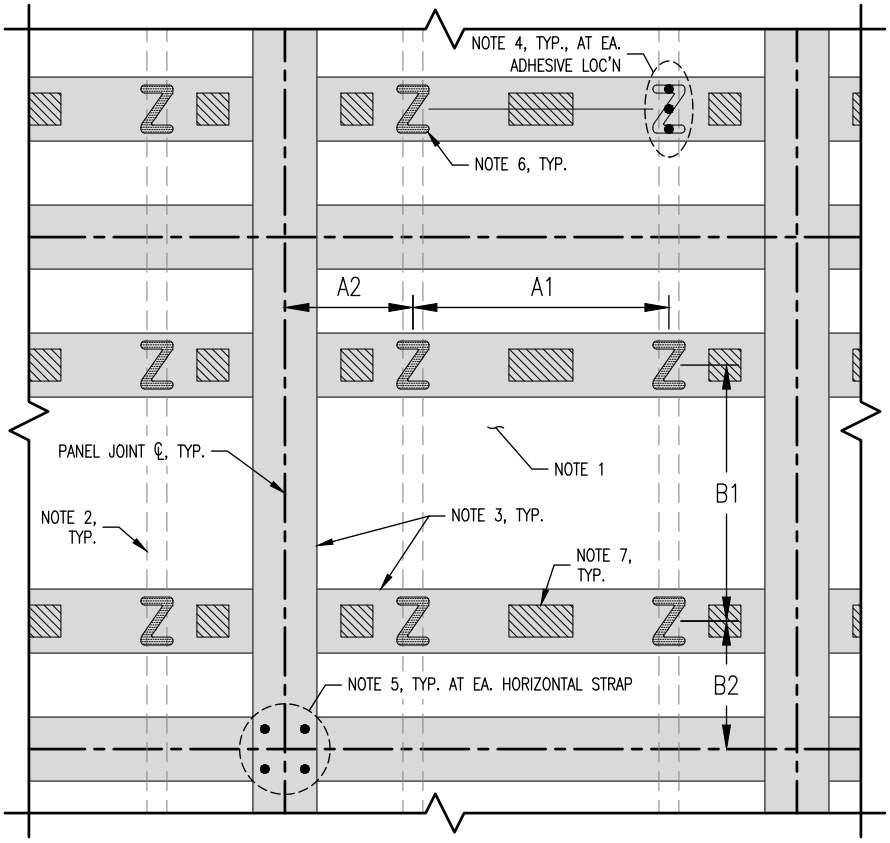

403 PARTIAL ELEVATION
GYPSUM SHEATHING

LAYOUT APPLIES TO LANDSCAPE AND PORTRAIT PANELS

NOTES:
1. EXTERIOR GRADE GYPSUM SHEATHING WITH AIR AND WATER BARRIER BY OTHERS
2. STRUCTURAL FRAMING (18 GA. MIN) BY OTHERS
3. CONTINUOUS STEEL STRAPPING (4" WIDE, 18 GA. MIN) BY OTHERS; STRAPPING TO BE LOCATED ALONG PANEL JOINT CENTERLINES AND AS REQUIRED TO SUPPORT PANEL ADHESIVE LOCATIONS
4. HORIZONTAL STRAPPING FASTENED TO EACH FRAMING MEMBER USING (3) #8 SCREWS*
5. VERTICAL STRAPPING FASTENED TO EACH HORIZONTAL STRAP USING (4) #8 SCREWS*
6. 1/2" (MIN) DIA. BEAD OF LAMINATORS APPROVED PANEL ADHESIVE APPLIED AT STRAPPING ATTACHMENT TO FRAMING IN 2" X 3" Z–FORMATION (SEE BELOW)
7. FOAM TAPE STRIPS (3/16" X 2" TO 4" LONG) APPLIED BETWEEN ADHESIVE LOCATIONS TO MAINTAIN ADHESIVE BOND LINE THICKNESS

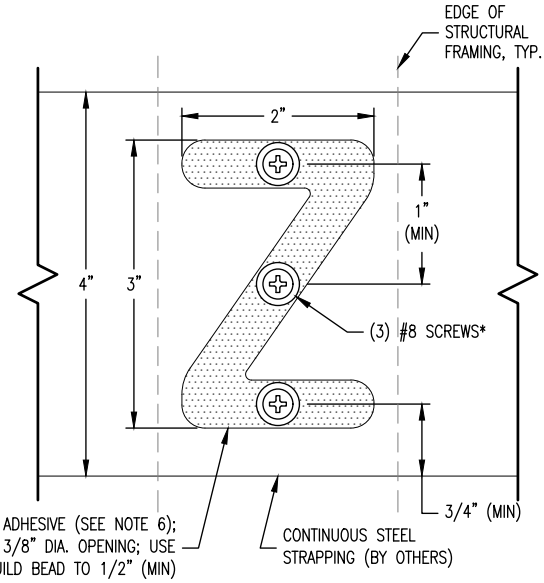

* SCREWS FOR STRAPPING ATTACHMENT TO STRUCTURAL FRAMING BY OTHERS; LOW–PROFILE HEAD (PPH OR PMTH) RECOMMENDED WITH PROPER LENGTH TO FULLY ENGAGE STRUCTURAL FRAMING

NOTE: 4" X 4" 18 GA. STEEL PLATE (PART NO. 41ACTF-PLATE) NOT USED WITH THIS SUBSTRATE

TABLE 403: LAYOUT REQUIREMENTS
GYPSUM SHEATHING

STRUCTURAL CAPACITY (PSF) [ASD]	PANEL ADHESIVE MAXIMUM SPACING (INCHES)				MOLDING SCREW MAXIMUM SPACING (INCHES)
	LANDSCAPE PANEL - HORIZONTAL PORTRAIT PANEL - VERTICAL		*LANDSCAPE PANEL - VERTICAL PORTRAIT PANEL - HORIZONTAL*		
	Z to Z (A1)	Z to JOINT (A2)	Z to Z (B1)	Z to JOINT (B2)	
40	24	16	16	16	12
60	16	12	16	12	

LAMINATORS
Composite Panel Solutions

www.LaminatorsInc.com 800.523.2347

LAYOUT REQUIREMENTS - GYPSUM SHEATHING

ADAPTACLAD TF
DESIGN & INSTALLATION DETAILS

Date:	Drawn By:	Detail Set:	Dwg. No.:	Rev:
11/2/2026	JJM	AC-TF	403	01

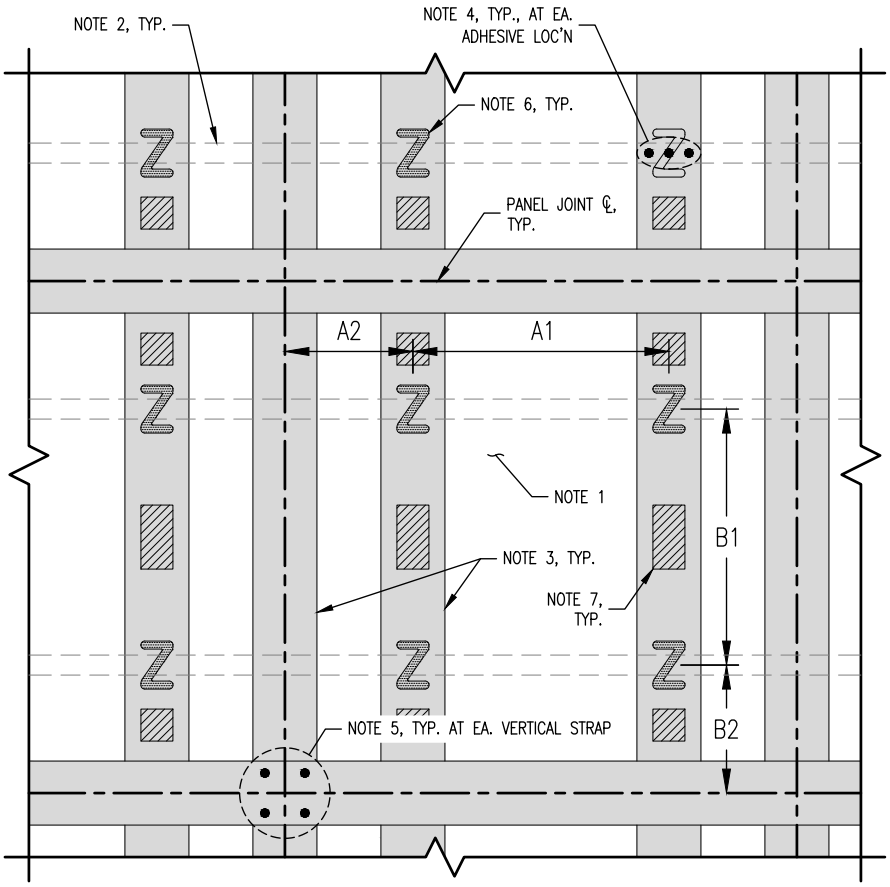

404 PARTIAL ELEVATION
MINERAL WOOL WITH Z-GIRTS OR RAILS

LAYOUT APPLIES TO LANDSCAPE AND PORTRAIT PANELS

* SCREWS FOR STRAPPING ATTACHMENT TO Z-GIRTS/RAILS BY OTHERS; LOW-PROFILE HEAD (PPH OR PMTH) RECOMMENDED WITH PROPER LENGTH TO FULLY ENGAGE Z-GIRT/RAIL FACE FLANGE

NOTE: 4" X 4" 18 GA. STEEL PLATE (PART NO. 41ACTF-PLATE) NOT USED WITH THIS SUBSTRATE

NOTES:
1. MINERAL WOOL BY OTHERS
2. Z-GIRT/RAIL (18 GA. MIN) BY OTHERS WITH 1-1/4" (MIN) FACE FLANGE WIDTH
3. CONTINUOUS STEEL STRAPPING (4" WIDE, 18 GA. MIN) BY OTHERS; STRAPPING TO BE LOCATED ALONG PANEL JOINT CENTERLINES AND TO SUPPORT PANEL ADHESIVE LOCATIONS
4. VERTICAL STRAPPING FASTENED TO EACH Z-GIRT/RAIL USING (3) #8 SCREWS*
5. HORIZONTAL STRAPPING FASTENED TO EACH VERTICAL STRAP USING (4) #8 SCREWS*
6. 1/2" (MIN) DIA. BEAD OF LAMINATORS APPROVED PANEL ADHESIVE APPLIED AT STRAPPING ATTACHMENT TO FRAMING IN 2" X 3" Z-FORMATION (SEE BELOW)
7. FOAM TAPE STRIPS (3/16" X 2" TO 4" LONG) APPLIED BETWEEN ADHESIVE LOCATIONS TO MAINTAIN ADHESIVE BOND LINE THICKNESS

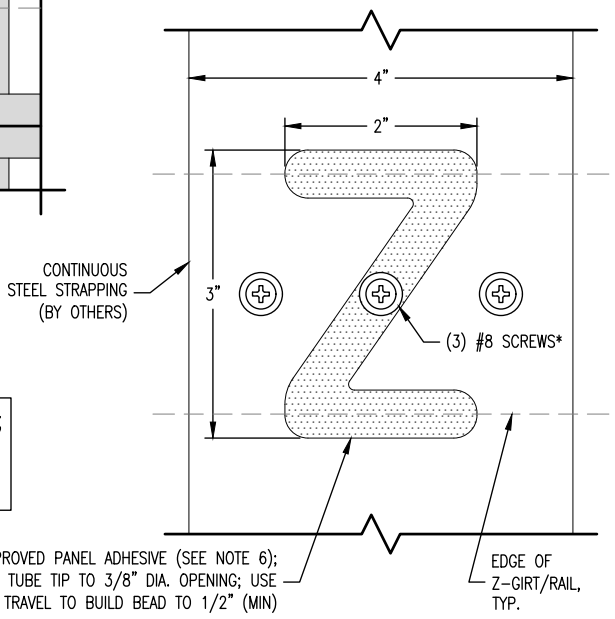

TABLE 404: LAYOUT REQUIREMENTS
MINERAL WOOL WITH Z-GIRTS OR RAILS

STRUCTURAL CAPACITY (PSF) [ASD]	PANEL ADHESIVE MAXIMUM SPACING (INCHES)				MOLDING SCREW MAXIMUM SPACING (INCHES)
	LANDSCAPE PANEL - HORIZONTAL PORTRAIT PANEL - VERTICAL		*LANDSCAPE PANEL - VERTICAL PORTRAIT PANEL - HORIZONTAL*		
	Z to Z (A1)	Z to JOINT (A2)	Z to Z (B1)	Z to JOINT (B2)	
40	24	16	16	16	12
60	16	12	16	12	

LAMINATORS
Composite Panel Solutions

www.LaminatorsInc.com 800.523.2347

LAYOUT REQUIREMENTS - MINERAL WOOL WITH Z-GIRTS OR RAILS

ADAPTACLAD TF
DESIGN & INSTALLATION DETAILS

Date:	Drawn By:	Detail Set:	Dwg. No.:	Rev:
11/2/2026	JJM	AC-TF	404	01

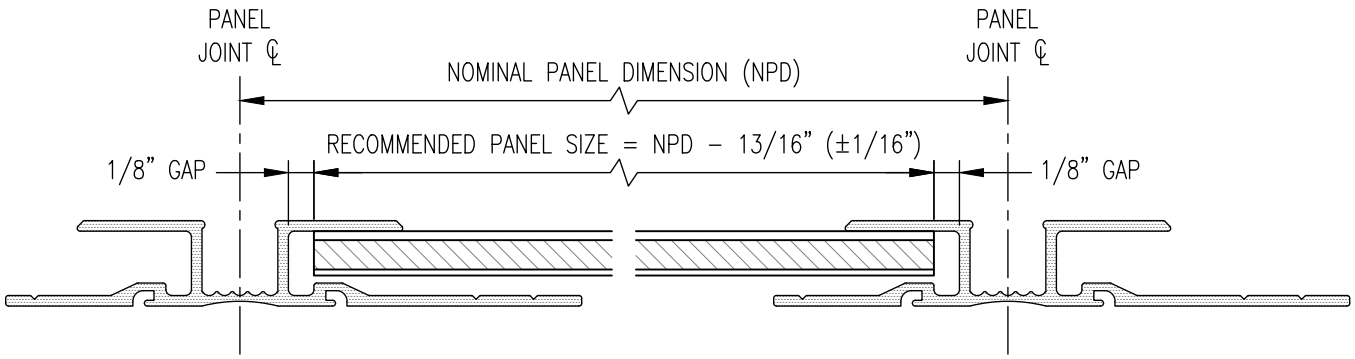

REVEAL H-MOLDING TO REVEAL H-MOLDING

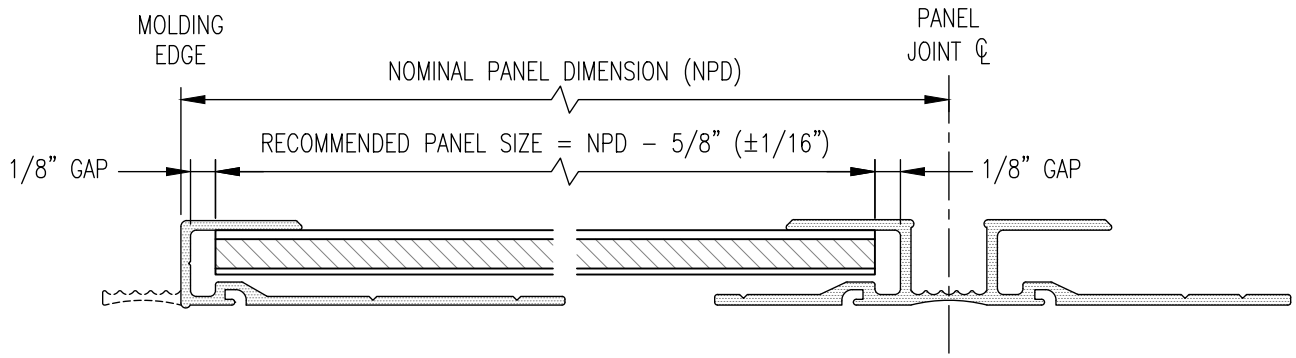

J- (OR TERM J-) MOLDING TO REVEAL H-MOLDING

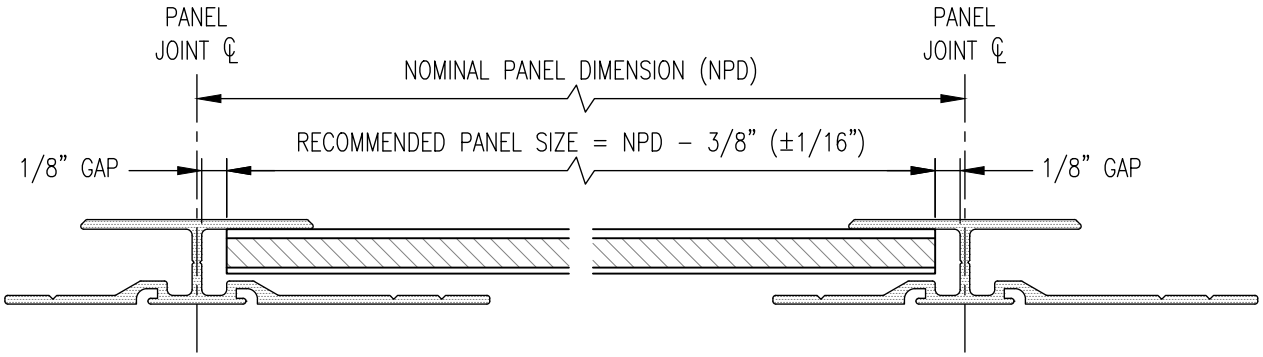

H-MOLDING TO H-MOLDING

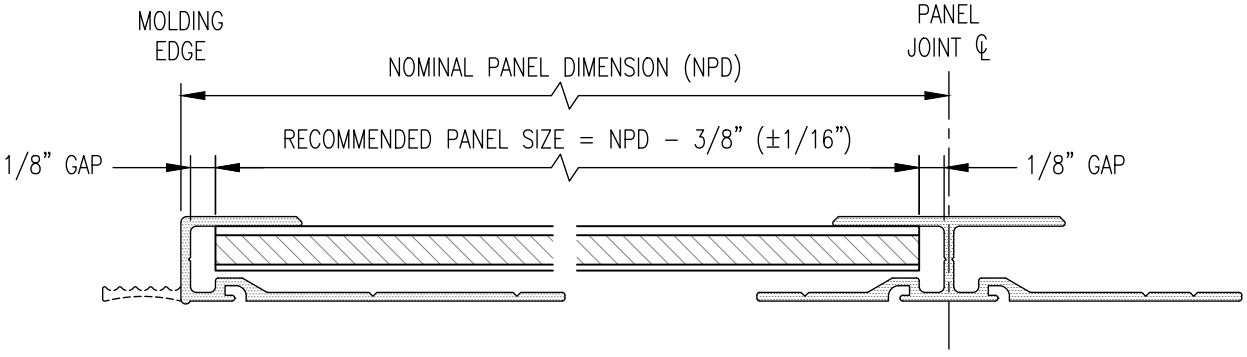

J- (OR TERM J-) MOLDING TO H-MOLDING

LAMINATORS
Composite Panel Solutions

www.LaminatorsInc.com 800.523.2347

PANEL CUT SIZE RECOMMENDATIONS

ADAPTACLAD TF
DESIGN & INSTALLATION DETAILS

Date:	Drawn By:	Detail Set:	Dwg. No.:	Rev:
10/26/2026	JJM	AC-TF	501	00

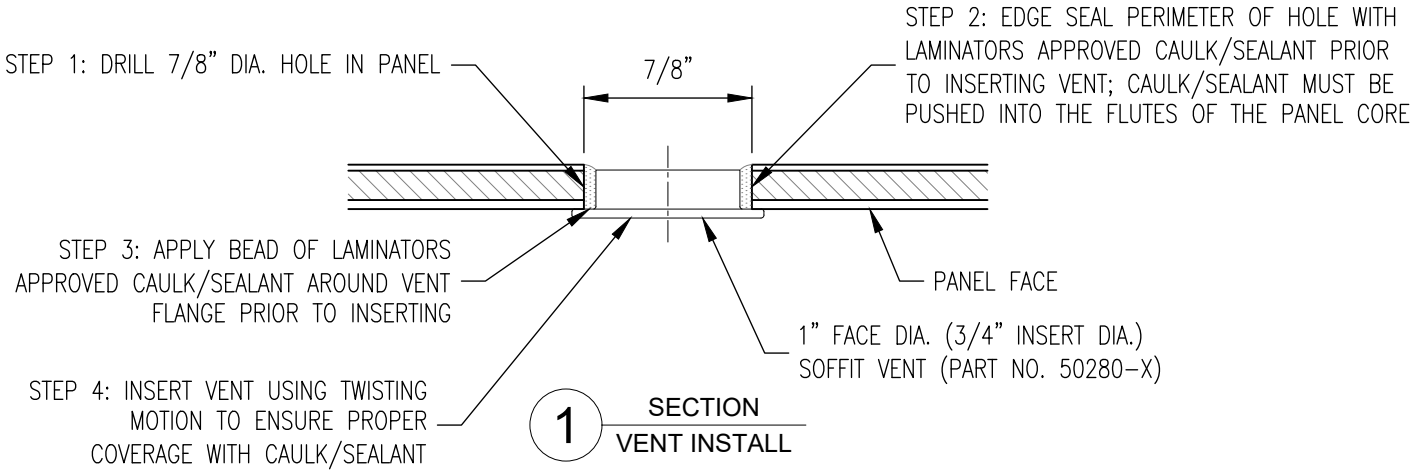

1 SECTION
VENT INSTALL

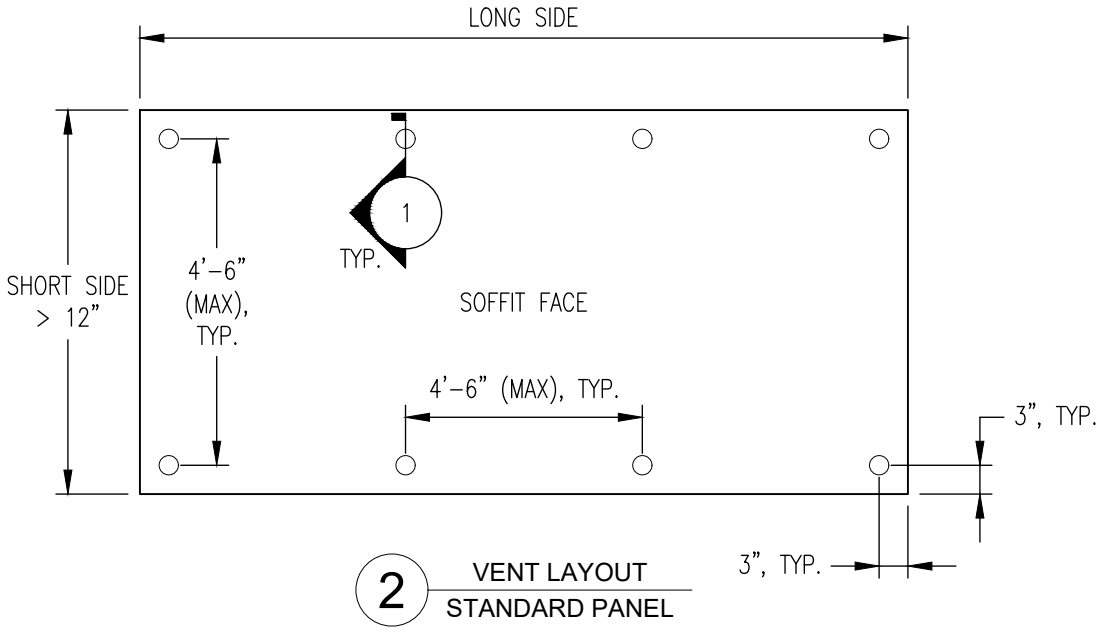

2 VENT LAYOUT
STANDARD PANEL

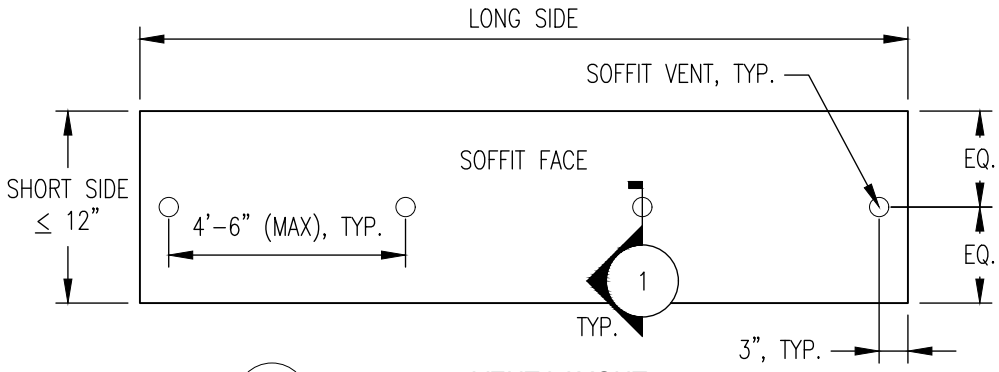

3 VENT LAYOUT
FASCIA-TO-SOFFIT TRANSITION PANEL

LAMINATORS
Composite Panel Solutions

www.LaminatorsInc.com 800.523.2347

SOFFIT VENT INSTALLATION

ADAPTACLAD TF
DESIGN & INSTALLATION DETAILS

Date:	Drawn By:	Detail Set:	Dwg. No.:	Rev:
10/26/2026	JJM	AC-TF	502	00

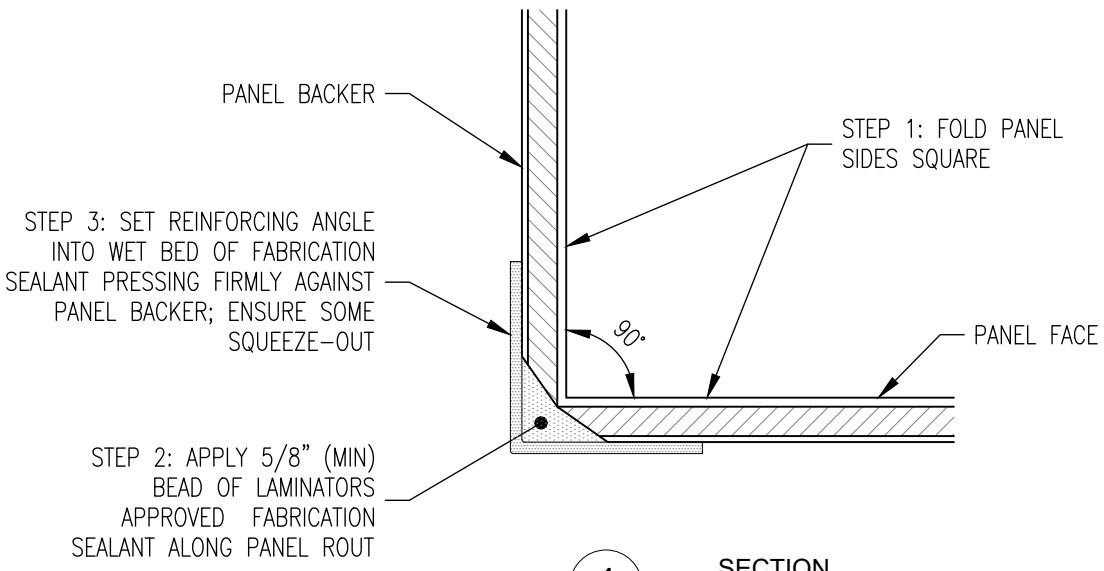

1 SECTION
INSIDE CORNER

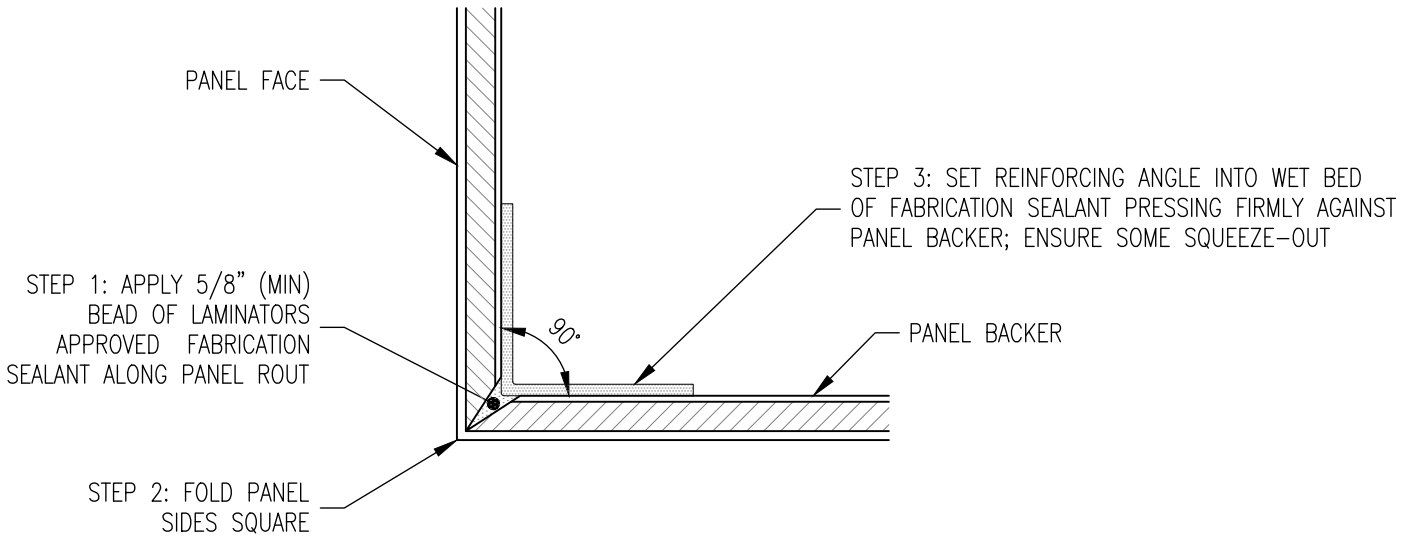

2 SECTION
OUTSIDE CORNER

LAMINATORS
Composite Panel Solutions

www.LaminatorsInc.com 800.523.2347

FABRICATED PANEL CORNERS

ADAPTACLAD TF
DESIGN & INSTALLATION DETAILS

Date:	Drawn By:	Detail Set:	Dwg. No.:	Rev:
10/26/2026	JJM	AC-TF	503	00

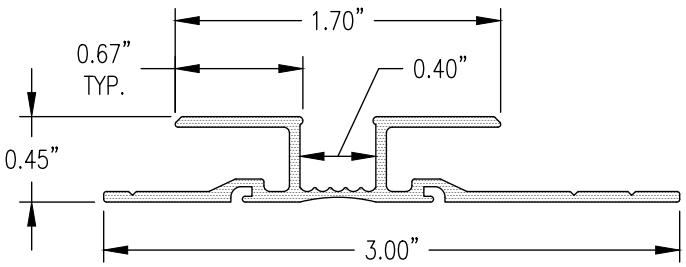

REVEAL H-MOLDING
PART NO. 4595X

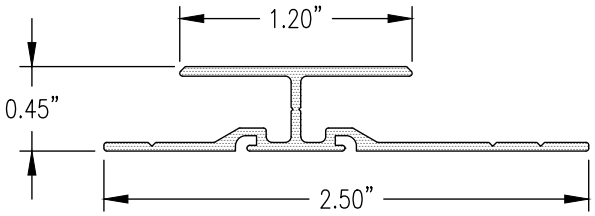

H-MOLDING
PART NO. 4505X

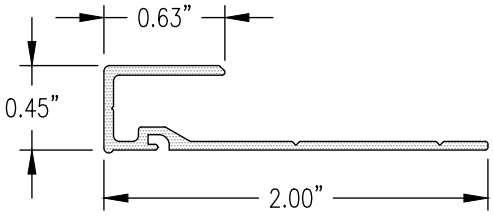

J-MOLDING
PART NO. 4515X

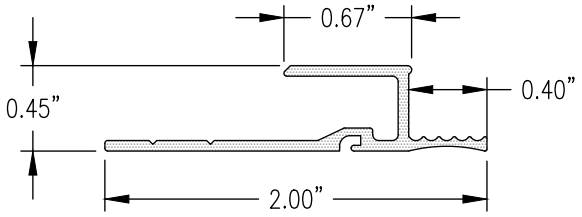

TERMINATION J-MOLDING
PART NO. 4565X

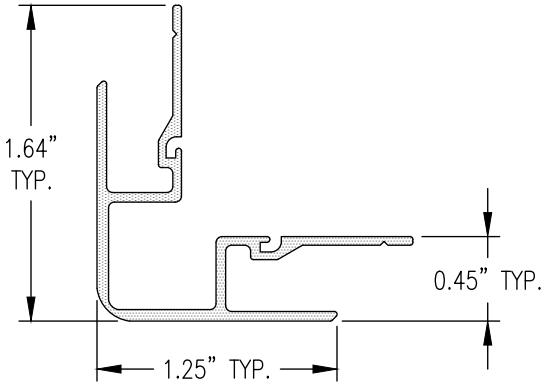

OUTSIDE CORNER (OC) MOLDING
PART NO. 4535X

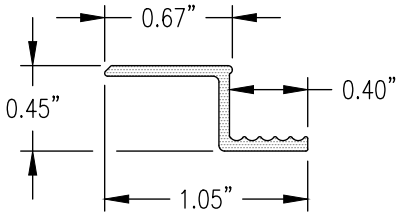

TERMINATION Z-MOLDING
PART NO. 4575X
AVAILABLE BY SPECIAL REQUEST ONLY (REFER TO 505)

LAMINATORS
Composite Panel Solutions

www.LaminatorsInc.com 800.523.2347

MOLDING PROFILES

ADAPTACLAD TF
DESIGN & INSTALLATION DETAILS

Date:	Drawn By:	Detail Set:	Dwg. No.:	Rev:
10/26/2026	JJM	AC-TF	504	00

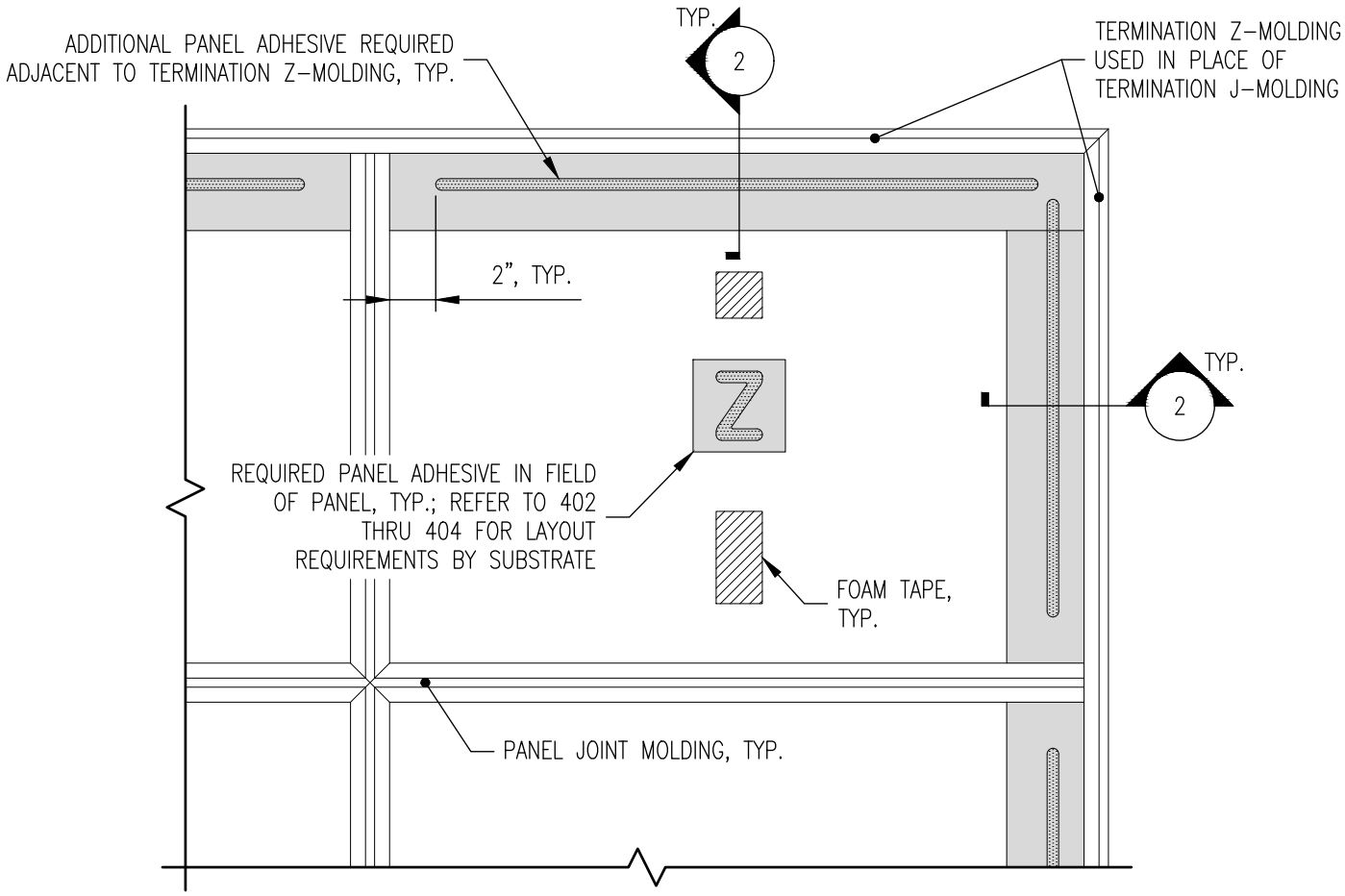

1 PARTIAL ELEVATION
PANELS NOT SHOWN FOR CLARITY

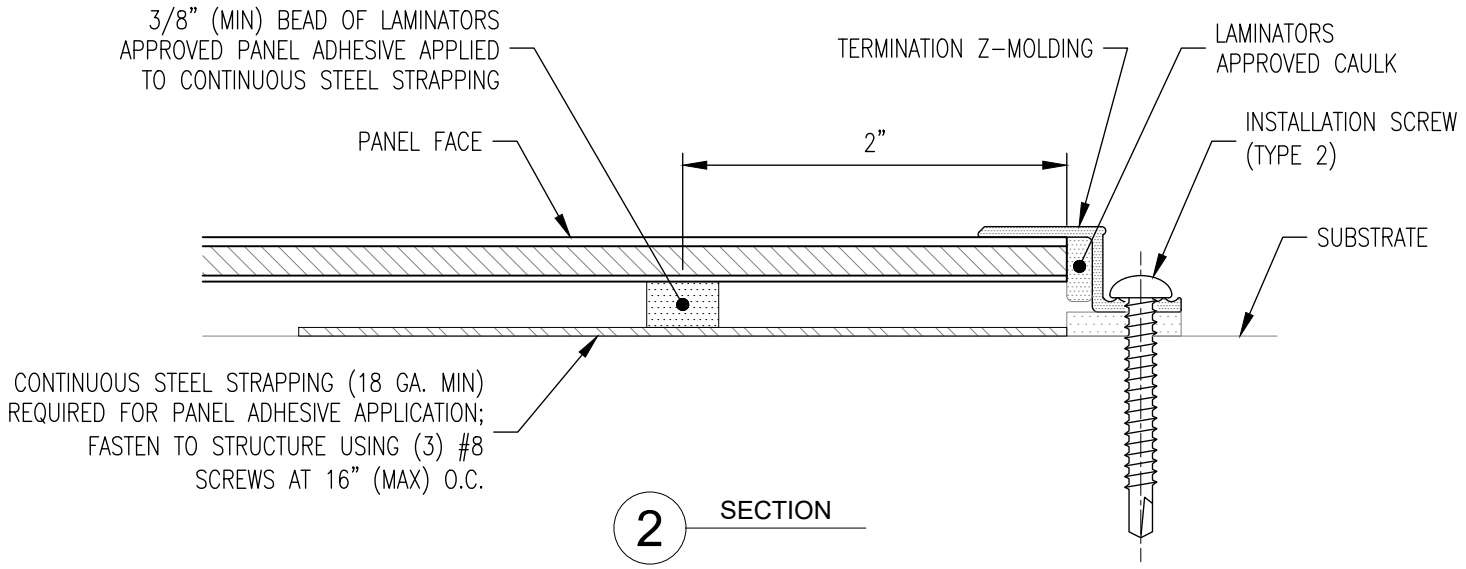

2 SECTION

LAMINATORS
Composite Panel Solutions

www.LaminatorsInc.com 800.523.2347

TERMINATION Z-MOLDING REQUIREMENTS

ADAPTACLAD TF
DESIGN & INSTALLATION DETAILS

Date:	Drawn By:	Detail Set:	Dwg. No.:	Rev:
10/26/2026	JJM	AC-TF	505	00