ADAPTACLAD TIGHT-FIT

SYSTEM GUIDE



LAMINATORS
Composite Panel Solutions

Effective November 2026

Tech Support: 800.523.2347 LaminatorsInc.com

TABLE OF CONTENTS

3	Features & Benefits: AdaptaClad TF + Omega CI
4	Application Limitations & NFPA 285 Compliance
5	Material Handling & Maintenance
7	Pre-Installation Requirements
8	Omega CI System Installation
9	Fabricated Corners & Soffit Transitions
10	System Installation
15	Essential Equipment & Materials

Denotes Additional Required Downloadable Content

SYSTEM OVERVIEW

The AdaptaClad Tight-Fit (TF) (formerly 1-Piece, Tight-Fit Molding) system from Laminators offers a traditional yet high-tech appearance at an affordable cost. The system incorporates Omega-Lite FR aluminum composite material (ACM) panels. Aluminum moldings used to encapsulate panel edges are available in both flat and reveal styles, providing two different aesthetic options for installation. Inclusion of optional shims can provide improved moisture management and increased ventilation.

When combined with Omega CI, AdaptaClad TF offers an effective solution for veneer installations over continuous insulation while balancing thermal performance, water management, and fire resistance code requirements. The AdaptaClad TF system is compliant with the NFPA 285 standard for multi-story fire testing in multiple wall assemblies. Supported assemblies incorporate Omega CI, mineral wool with Z-girts, and other third-party continuous insulation solutions.

WARRANTY DISCLAIMER

Failure to follow ANY of the guidelines contained within this document or those referenced on LaminatorsInc.com will void your warranty. For technical support, call 800.523.2347.



IMPORTANT NOTICE

This document is NOT comprehensive for installation, bidding, or design. Laminators' AdaptaClad TF Design & Installation detail set (available at LaminatorsInc.com) is REQUIRED to be used in conjunction with this guide.

LAMINATORS
Composite Panel Solutions

FEATURES & BENEFITS: ADAPTACLAD TF + OMEGA CI

Features of Omega CI

Omega CI is a structural insulated sheathing panel consisting of a closed-cell, polyisocyanurate ("polyiso") foam core bonded to a coated glass backer and 5/8" fire-treated plywood as an exterior face. Omega CI is available in 4' x 8' sheets up to 4.1" thickness.

- Solves the installation challenges associated with continuous insulation.
  - The foam insulation layer provides thermal resistance to achieve the desired R-value for the wall assembly without causing significant thermal bridging
  - Incidental water is managed at the face of the plywood sheathing layer (in combination with an air and water barrier) to avoid trapping water within the insulating layer
  - Does not require complex detailing and can be installed in a similar manner to traditional plywood sheathing
- Combines the installation of continuous insulation and sheathing into one component
- The plywood layer is fire-treated to allow for NFPA 285 compliance

Benefits of AdaptaClad TF + Omega CI

Combining Laminators' AdaptaClad TF system with Omega CI and an air and water barrier offers a simple design solution for installations requiring continuous insulation while maintaining code-mandated performance requirements.

- Laminators' systems install directly to the plywood sheathing layer of Omega CI
  - Removes complex detailing and extensive planning associated with most proprietary "bracket-type" solutions for installation of ACM veneer systems over continuous insulation
  - Components can easily be relocated during construction providing installers with the flexibility necessary to accommodate changing field conditions
- Provides designers and installers the freedom to choose almost any air and water barrier product that can be installed over plywood sheathing. NFPA 285 testing was performed with a specific air and water barrier product, but multiple compliant product options are available via extension from a third-party fire consultant.
  - Panel adhesive interfaces directly with steel plates secured to the Omega CI, removing the potential for panel adhesive incompatibility with air and water barrier products

APPLICATION LIMITATIONS & NFPA 285 COMPLIANCE

ADAPTACLAD SYSTEM LIMITATIONS

General Limitations

Laminators' AdaptaClad TF system is designed to be installed as a cladding system for exterior wall envelopes. The systems must be installed over a suitable substrate as indicated within this guide.

The system is **NOT** intended for the following applications:

- Serving as a substrate for additional cladding systems
- Primary water control layers
- Top-side horizontal applications (e.g., copings, roofing returns, cornices) due to the potential for water infiltration from snow and rain events
  - Laminators recommends the installation of flat stock aluminum in place of panels for all top-side horizontal applications. Color-matched flat stock aluminum is available from Laminators.
  - Laminators defines top-side horizontal applications as any surface with a slope measuring less than 60 degrees from the horizontal plane (or a slope greater than 30 degrees measured from the vertical plane.

OMEGA CI LIMITATIONS

Omega CI is designed to be installed in a similar manner to traditional sheathing over an exterior wall assembly.

Omega CI is **NOT** intended for the following applications:

- Replacement of primary exterior wall sheathing
- Sheathing layers required to achieve fire ratings for exterior wall assemblies
- Sheathing layers required to achieve shear capacity for lateral force resisting systems
- Installations extending below grade

NFPA 285 COMPLIANCE

Laminators' AdaptaClad TF system meets the Conditions of Acceptance for NFPA 285 in specific tested wall assemblies. Test reports are available upon request. An Engineering Evaluation (EEV) is available that presents specific engineering extensions and permits substitutions for some wall assembly components while maintaining NFPA 285 compliance. The EEV may be required for project-specific submissions to an Authority Having Jurisdiction (AHJ). The Design Professional of Record (DPR) is responsible for establishing NFPA 285 compliance for any wall assembly incorporating combustible components as required by applicable building code.

Laminators is NOT responsible for NFPA 285 compliance related to wall assemblies incorporating Laminators' products that are NOT documented under one of the following:

1) Specific wall assemblies tested by Laminators, or
2) An EEV supplied by Laminators from a third-party fire consultant.

If documented compliance is not available from Laminators, the DPR is responsible for contacting a third-party fire consultant to establish compliance via a separate EEV or modifying the proposed wall assembly to a compliant condition.

MATERIAL HANDLING & MAINTENANCE

STORAGE & HANDLING

Material Receiving

Upon receipt of Laminators products, perform a visual inspection and inventory to identify any damages that may have occurred during shipping or any materials that may be missing. Any damages or missing materials must be noted on the bill of lading at the time of receipt and must be immediately reported to the distributor from which the product was purchased.

NOTE: For 30 days from the time of delivery to the jobsite, Laminators warrants that Omega CI insulation panels will be free from plywood delamination due to manufacturing defects. Checking, leafing, splitting, and broken grain are not considered to be manufacturing defects and shall be excluded.

Storage

Omega-Lite FR panels are to be stored horizontally on pallets in a dry, well-ventilated environment under the protection of a temporary or permanent roof structure. No more than 2500 pounds of panels are to be stacked on one pallet. If panels are to be stored in an exterior area, they must be placed under a well-ventilated, waterproof covering. Storage temperatures are not to exceed 120°F. Panels should be stored in an area protected from other construction activities and associated debris. Other materials shall not be stacked or placed in contact with panels to prevent staining, denting, or other damages.

Omega CI rigid insulation panels are double-packaged in a UV-resistant polyethylene bag designed for protection from the elements during flatbed shipment to the jobsite and short-term storage during construction. Omega CI panels must be protected from moisture and direct sunlight while on the jobsite. Outdoor storage of Omega CI for periods of time in excess of 45 days requires additional weatherproofing considerations and shall be secured under well-ventilated, waterproof coverings and elevated a minimum of 4" above ground level or as required to avoid contact with standing water.

Laminators' warranty does not cover damages related to improper storage. Storage conditions should be continuously monitored as any water infiltration, standing water, construction debris, or excessive temperatures will cause damage to the panels that will not be covered under warranty.

Handling

Omega-Lite FR panels are shipped with a protective masking to minimize scratching and staining during installation. Protective masking should be left on the field of the panel during installation to minimize potential damages from construction activities. Note that all masking must be removed within 2 weeks of panel installation, otherwise removal may become difficult and the masking adhesive may affect the appearance of the panel following removal.

Handle Omega-Lite FR panels with clean work gloves to avoid hand injury from any sharp edges and to prevent staining of surfaces with contaminants. When moving individual panels from stacks, always lift one panel completely off the next to prevent surface scratches from construction debris. Do not slide one panel across another. Glazing suction cups are recommended to handle panels whenever possible.

Cutting

Omega-Lite FR panels, panel moldings, and Omega CI rigid insulation panels are shipped in standard sizes that can be cut to required installation size on the jobsite. To cut panels, moldings, and sub-framing members, use a circular saw or table saw with a carbide-tipped blade (60-tooth minimum) suitable for cutting non-ferrous metals. For cutting Omega CI, the use of a table saw is recommended. Do not remove the protective masking from the face of the Omega-Lite FR panel prior to cutting. After cutting, use a deburring tool (Part No. DEBURRING TOOL) to remove burrs or sharp edges from the panels.

MAINTENANCE OF OMEGA-LITE FR PANELS

Cleaning

Omega-Lite FR panels should be cleaned at regular maintenance intervals following procedures documented in AAMA 609 & 610 "Cleaning and Maintenance Guide for Architecturally Finished Aluminum." During installation, mineral spirits or isopropyl alcohol can be used to remove uncured caulk and sealants. Never soak panels in solvents or allow solvents to be left in prolonged or continuous contact with panel surfaces as this can cause damage to panel finishes.

Scratches & Rub Marks

Touch-up paints are available from Laminators. Contact Laminators technical support for additional information.

Metallic Paint & Anodized Finishes

When installing panels with metallic and anodized finishes, it is very important that the directional arrows on the panel masking are oriented in the same direction. Color variation is a characteristic of aluminum composite panels with metallic paint and anodized finishes. Laminators **DOES NOT** warrant a color match for panels with metallic and anodized finishes.

MATERIAL HANDLING & MAINTENANCE

To ensure good color uniformity in panels with metallic finishes, periodically check adjoining panels by partially removing masking as the installation progresses. The masking should be reapplied to the panel to protect it. Should any defects be found, stop work immediately and contact Laminators for assistance.

Panel Color Coordination & Planning

Coordinate with Laminators for large projects ordered in phases to ensure the most consistent color matches between project phases.

PRE-INSTALLATION REQUIREMENTS

Substrate Compatibility & Tolerances

A continuous structural (or nailable) substrate (Omega CI or exterior-grade plywood or OSB) with a vapor-permeable air and water barrier is **recommended** for panel system installation. Direct application of panel adhesive to air and water barrier products is not supported. Steel plates are required at all panel adhesive locations. Refer to Laminators' AdaptaClad TF Design & Installation Detail set (available at LaminatorsInc.com).

Installations over alternate substrates are permitted, but require additional coordination as follows:

- Direct installation over exterior-grade gypsum sheathing requires supplemental framing (continuous steel flat strapping) to support all panel joints and adhesive locations.
- Installation over mineral wool with Z-girts requires supplemental support framing and verification that the maximum tested air gap is not exceeded for NFPA 285 compliance.

Imperfections in any substrate may transfer through to the installed panel system. Prior to installation, the installer must verify that the substrate is within flatness tolerances. The maximum out-of-plane tolerance for panel installation shall be the smaller of the following:

- 1/4" in any 20' length measured vertically or horizontally, or
- 1/2" in any building elevation direction

All substrates must be structurally sound, within flatness tolerances, clean of debris, and dry. If unsatisfactory conditions are encountered, do **NOT** proceed with panel system installation. Unsatisfactory conditions should be immediately reported to the General Contractor and/or Design Professional of Record and must be corrected prior to panel installation. Laminators **DOES NOT** warranty the in-plane condition of the panel system following installation.

Water Controls & Ventilation

The system is designed to deflect bulk water at the surface of the panel veneer. An established drainage plane with an air and water barrier is required behind the system. The inclusion of optional shims behind panel moldings can provide improved moisture management and increased ventilation.

Proper flashings at roofs, parapets, wall openings (fenestrations), and other interfaces with dissimilar materials are essential to manage bulk water infiltration into the system. Weep and base wall flashings are necessary to provide a means for incidental water that enters the cavity behind the panel veneer to exit the system. Establishing ventilation (air flow) throughout the cavity is necessary to promote drying of any water that does not exit the system from weep and base wall flashings. At a minimum, venting is required at roof and parapet copings, wall opening heads and sills, grade interfaces, soffit panels, and fascia-to-soffit transition panels.

Water control and ventilation requirements will vary from project to project and the details in this manual and its related documents are intended to represent minimum requirements for Laminators' AdaptaClad TF system to function as designed. Further considerations for water controls and ventilation will need to be established by the Design Professional of Record to meet specific project needs.

Installer Responsibilities

The panel installer is responsible for the following prior to proceeding with installation:

1. Review Laminators AdaptaClad TF Design & Installation detail set (available at www.LaminatorsInc.com).
2. Confirm that the Design Professional of Record has established water controls for the project in the form of a defined drainage plane with an air and water barrier and associated flashings to manage water out of the panel system.
3. Confirm that the product accessories specified for installation (silicone caulks, fabrication sealants, adhesives) are Laminators approved materials.
4. Confirm that selected installation detailing (adhesive layout and molding attachment) meets project wind load requirements as established by the Design Professional of Record.
5. Confirm that the panel system is to be installed over a compatible substrate within acceptable installation tolerances.
6. Provide temporary protections during construction to protect areas of panel installation and associated substrates from construction debris and water infiltration.
7. Ensure that no panel edges are left unsupported at the end of a work session. Confirm that all moldings are in place along all panel edges upon completing work session.

OMEGA CI SYSTEM INSTALLATION

Omega CI rigid insulation panels are installed in a similar manner to traditional plywood sheathing. Each panel consists of 5/8" fire-treated plywood sheathing bonded to polyiso foam core with a coated glass backer and is available in 4' x 8' sheets up to 4.1" thickness. Panels are fastened directly to the exterior wall assembly using specialized fasteners available from Laminators.

Omega CI may be installed over the following exterior wall assemblies:

- Fire-rated assemblies with exterior-grade gypsum sheathing over steel stud framing
- Plywood or OSB sheathing over steel or wood stud framing
- CMU block walls
- Pre-cast or cast-in-place concrete walls

NOTE: Installations over open framing are not permitted. Omega CI is not intended to function as primary structural wall sheathing. For substrates not listed above, contact Laminators technical support.

Installation over sheathing with steel stud framing is covered for the purposes of this guide. Partial installation layout shown is representative of typical fastening pattern. Refer to CAD details at LaminatorsInc.com for type and spacing of fasteners (spacing will vary based on project wind load requirements). Contact Laminators technical support for fastener recommendations when installing over sheathing with wood stud framing, CMU block walls, and pre-cast or cast-in-place concrete walls.

Installation Guidelines

1. Lay out location of steel stud framing on face of exterior wall assembly sheathing prior to installation.
2. Install panels horizontally in a running bond pattern with a single stud (min) joint offset. Avoid 4-corner intersections.

NOTE: Panels may be installed vertically as required. Do not span building expansion joints.

3. Install fasteners along panel joints and terminations so that center of fastener head is 1/4" (min) to 2" (max) from edge of plywood sheathing layer. Ensure that fasteners fully engage stud flanges.
4. Pre-cut panels as required to fit openings and projections.
5. For inside and outside building corners, remove portion of the foam layer along the edge of one panel at intersection to maintain continuity in the plywood sheathing layer (refer to CAD details at LaminatorsInc.com for additional information regarding inside and outside corners).
6. Maintain 1/8" gap between adjacent panels to allow for thermal expansion of wood sheathing layer.
7. For panels installed at grade terminations or directly against foundation, apply self-adhering membrane flashing (Part No. OCI-MEMBRANE FLASHING) to bottom edge and wrap 2" (min) distance onto each vertical face. Membrane flashing must be applied prior to installation.

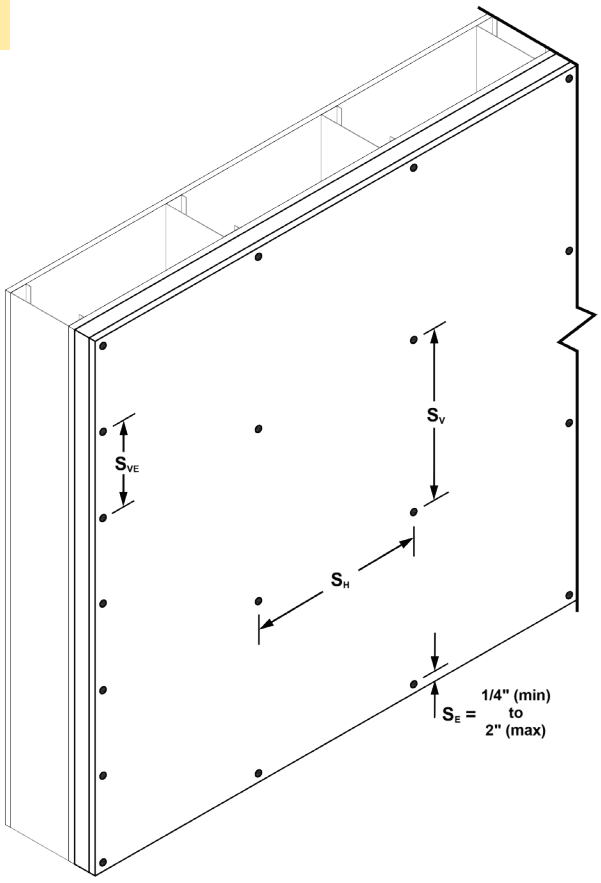

FABRICATED CORNERS & SOFFIT TRANSITIONS (OPTIONAL)

Fabricated Omega-Lite FR panels can be used to turn building corners and make transitions from fascia to soffit conditions. The following procedures must be followed for panel fabrication:

1. Set up a router table or portable router table to accept a 1/2" carbide shank with Laminators custom-designed router bit (Part No. RB 1/2).

NOTE: This router bit is only available from Laminators. Bit is not intended for use with a CNC router table.

2. Orient the panel so that the router is cutting into the back of the panel (non-finish side). Center the router bit along the desired location of the corner bend and carefully rout the length of the panel, creating a v-groove. The use of a solid edge guard is recommended to maintain a straight v-groove. Verify that the depth of the router bit is properly set so that the entire panel core is removed and the back of the aluminum face metal is lightly scored during the process.

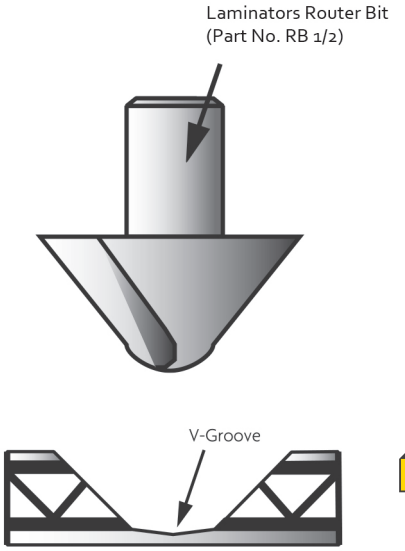

NOTE: The rout for the corner bend is to be located on the back of the panel (non-finish side) regardless of fabrication for inside or outside corners. The thickness of aluminum face metal remaining should be .020".

3. Apply Laminators approved fabrication sealant along the v-groove prior to folding the panel. For inside corner applications, fabrication sealant is applied after folding.

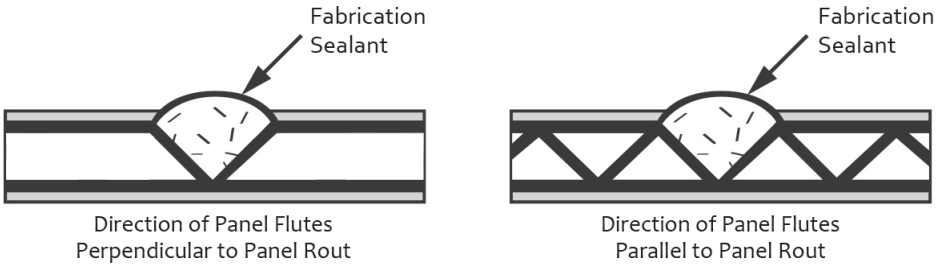

NOTE: Apply Laminators approved fabrication sealant at an approximate coverage rate of 1/2 to 3/4 oz. per foot.

4. Gently fold the entire panel along the corner rout to create either an inside or outside corner panel. For outside corners, ensure that enough sealant has been installed in the v-groove to force the sealant into the panel flutes during bending.

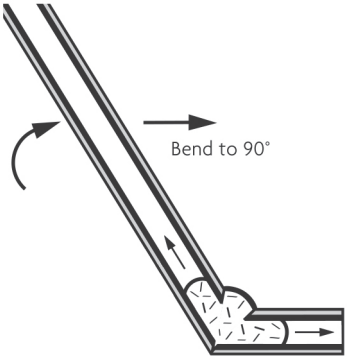

FABRICATED CORNERS & SOFFIT TRANSITIONS (OPTIONAL)

5. All panel corners must be reinforced using 1" x 1" x .060" continuous aluminum angles (Part No. 44DS-ANGLE) installed along the full length of the corner rout. Tool excess fabrication sealant squeeze-out from corner rout prior to installation of reinforcement angle to facilitate proper fit. Take care not to remove any sealant from the panel rout during tooling. Set the reinforcement angle in full bed of fabrication sealant along folded corner rout.

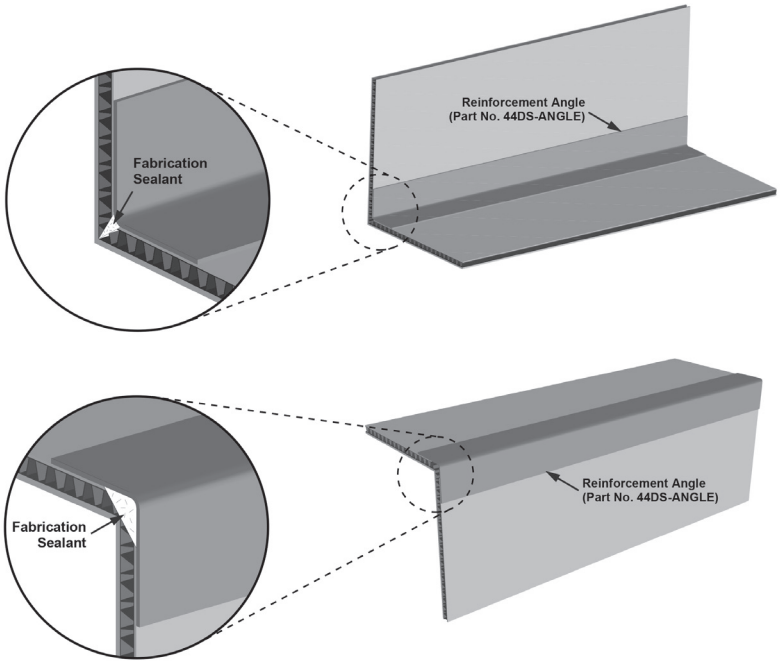

SYSTEM INSTALLATION

SYSTEM OVERVIEW

The AdaptaClad TF installation system is a progressive-build system where edges of field-fabricated Omega-Lite FR panels are seated into aluminum moldings that are fastened to the substrate. Panel adhesive is applied to steel plates secured to substrate behind panels to facilitate transfer of wind loads back to structure.

Joint moldings are available in two styles: H-Moldings (Part No. 4505X) and Reveal H-Moldings (Part No. 4595X). The panel system is captured at perimeters using J-Moldings (Part No. 4515X) and Termination J-Moldings (Part No. 4565X). Outside Corner (Part No. 4535X) moldings are available for turning vertical building corners. Termination Z-Moldings (Part No. 4575X) are available by special request (alternate detailing required).

Planning for panel system layout is required to make sure that the appropriate moldings are used during the installation process. Aluminum moldings are asymmetrical with a short side intended to slip over the edge of installed panels and a long side to be used as a fastening flange that will also serve as a starting point for the next panel in the installation sequence. Correct orientation of moldings during panel placement is necessary to avoid creating “trapped” conditions where installation of the panel system cannot proceed. System installation is intended to begin at the base of a wall at the left edge of the proposed installation area, continue upward to extent necessary, and then progress to the right.

IMPORTANT NOTICE

This installation guide is NOT comprehensive for installation, bidding, or design. Refer to Laminators' AdaptaClad TF Design & Installation detail set (available at LaminatorsInc.com) for requirements regarding panel adhesive layout, molding fastening, system structural capacity, and specialized detailing for NFPA 285 compliance.

SYSTEM INSTALLATION

MOLDING INTERSECTION OPTIONS

Several aesthetic options are available for the 4-way intersection of moldings. The options covered by this guide are vertical pass-through joints with H- or Reveal H-Moldings and mitered joints with Reveal H-Moldings. The system installation will need to be altered based on the chosen aesthetic option. The Design Professional of Record must choose a 4-way joint option when specifying the AdaptaClad TF system.



Vertical Pass-Through Joint with H-Moldings



Vertical Pass-Through Joint with Reveal H-Moldings



Mitered Joints with Reveal H-Moldings

NOTE: Other options for 4-way joint treatments (e.g., horizontal pass-through, mitered H-moldings, mixed molding styles) are possible but are not covered within this guide. It is the responsibility of the installer to confirm the desired joint aesthetic and 4-way intersection treatment with the Design Professional of Record prior to proceeding with installation.

NOTCHING MOLDINGS

Intersecting moldings must be notched along their back leg(s) so that the finish faces align correctly following panel installation. Mark 2" to either side of the intersecting centerline on the molding to be notched.

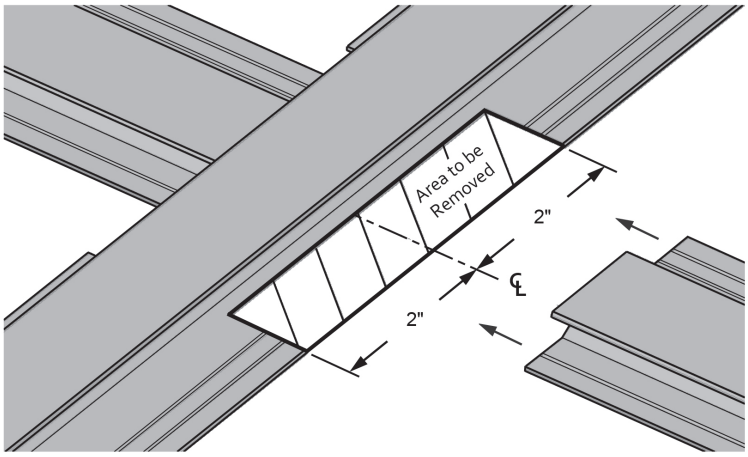

SYSTEM INSTALLATION

PANEL INSTALLATION WITH VERTICAL PASS-THROUGH JOINTS (H- OR REVEAL H-MOLDINGS)

Panels may be cut to desired size in advance of installation or as installation progresses (refer to “Material Handling & Maintenance” on page 5 for additional information on equipment requirements for cutting operations). Laminators recommends cutting panels to size as installation progresses to allow for flexibility in adjustment of final panel cut size to accommodate field conditions.

1. Prepare and install vertical J-Molding along leftmost vertical edge of installation area.
   a. Cut notches for intersections with horizontal moldings (refer to “Notching Moldings” on page 11).
   b. Verify molding is plumb and fasten as required.

   NOTE: If using 1/8" shims (optional), they must be placed at each fastener location for all moldings to be installed.

   c. Repeat as necessary to maintain continuous moldings along the leftmost vertical edge of the installation area.
2. Prepare and install horizontal J-Molding along base of installation area.
   a. Cut notches for intersections with vertical moldings.
   b. Verify molding is level and fasten as required along sub-framing.
   c. Repeat as necessary to maintain continuous moldings along base of installation area.
3. Prepare vertical H- or Reveal H-Molding for installation at vertical panel joint.
   a. Cut notches for horizontal H- or Reveal H-Molding intersections.
   b. Temporarily install molding plumb with 1 fastener at each end.
4. Cut horizontal H- or Reveal H-Moldings to length for all horizontal joints.
   a. Measure length of horizontal moldings to be the clear distance between finish faces of vertical moldings.
5. Remove temporarily installed molding from step 3 and set aside along with cut molding(s) from step 4.
6. Apply Laminators approved silicone caulk within the recessed channel of the previously installed moldings.
   a. Only apply caulk within moldings to extent of where panel is to be installed.
7. Install panel into left-side vertical and bottom-side horizontal moldings.
   a. Peel masking back approximately 2 to 3 inches from all panel edges.
   b. Apply panel adhesive and foam tape to substrate as required (refer to AdaptaClad TF Design & Installation detail set for required information).

   NOTE: Only apply panel adhesive for one panel at a time.

   c. Taking care not to contact panel adhesive, lift panel and insert edges into horizontal and vertical moldings.
8. Install a horizontal H- or Reveal H- molding from step 4.
   a. Apply Laminators approved silicone caulk within the recessed channel along the short side of the molding and slide molding onto the top of the installed panel.

   NOTE: The long side of the H- or Reveal H-Molding should be facing away from the installed panel so that the molding can be fastened to the substrate.

   b. Verify molding is level and fasten as required.
9. Repeat steps 6 through 8 to install the next panel(s) moving upward.
10. Install vertical H- or Reveal H-Molding previously prepared in step 3.
    a. Apply Laminators approved silicone caulk within the recessed channel along the short side of the molding and slide molding onto the sides of the installed panels.
    b. Verify molding is plumb and fasten as required.
    c. Repeat as necessary to maintain continuous moldings along the right vertical edge of installed panels.

IMPORTANT NOTICE

DO NOT BOTTOM OUT PANELS WITHIN MOLDINGS. Maintain approx. 1/8" gap between base of molding and edge of panel when seated to allow for thermal expansion. To aid in maintaining gaps, 1" lengths of 1/8" dowels (any material) may be placed within the recessed channel of the moldings (before or after silicone caulk application) as a spacer to control panel placement and silicone caulk squeeze-out. Contact Laminators for further recommendations.

SYSTEM INSTALLATION

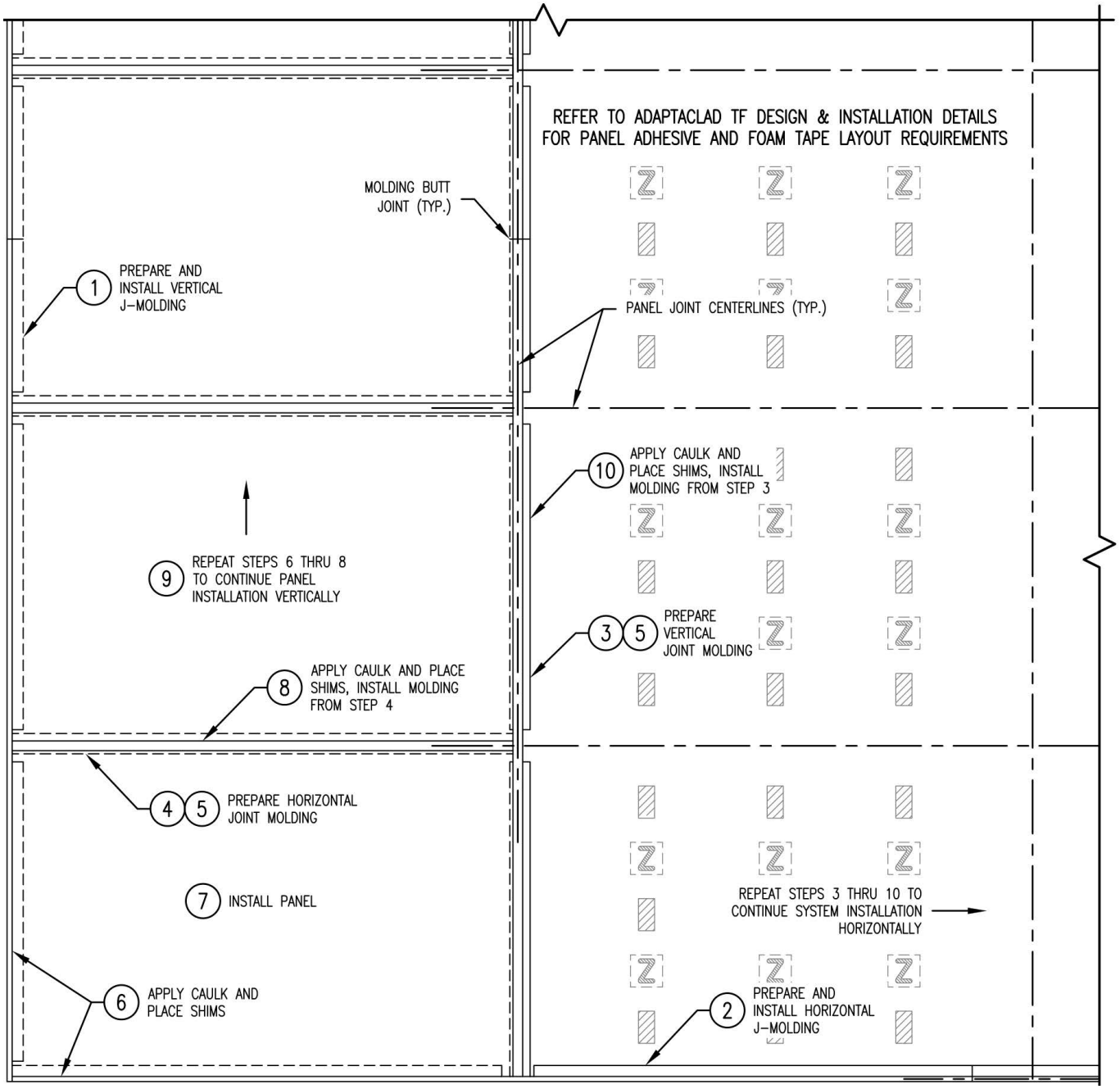

Repeat steps 3 through 10 to continue upward to extent necessary and then progress system installation to the right.

- Refer to “Terminating the System” on page 14 for instructions on finishing the last panels along the top and right side of the installation area

SYSTEM INSTALLATION

PANEL INSTALLATION WITH MITERED JOINTS

Installation with mitered joints follows a similar process to pass-through joints with some notable differences:

- All H- or Reveal H-Moldings are cut to length for each individual panel
- Installation must begin with the first panel at the lower left corner of the installation area but can then proceed either upward or to the right at the installer's discretion

TERMINATING THE SYSTEM

The last panels along the top and right side of any installation area are finished using Termination J-Moldings. Note that Termination Z-Moldings are available by special request only and require additional steps for installation. Refer to AdaptaClad TF Design & Installation detail set for more information.

1. Cut notches for intersections with horizontal and vertical moldings.
2. Apply Laminators approved silicone caulk and place shims within the recessed channel of the moldings
3. Slide molding onto the sides of the installed panels to be terminated.
4. Verify molding is plumb/level and fasten as required.
5. Repeat as necessary to maintain continuous moldings along the top and right vertical edge of installation area.



NOTE: Installation of Termination J-Molding will leave exposed fasteners. Exposed fasteners are intended to be concealed with sealant joints. Refer to AdaptaClad TF Design & Installation detail set for more information.

ESSENTIAL EQUIPMENT & MATERIALS

Essential Equipment

- Aluminum brake capable of bending 0.060” aluminum
- Laminators router bit (Part No. RB 1/2)
  - Custom-designed carbide router bit with 1/2" shank only available from Laminators
- Miter saw or chop saw with 10" (min) diameter blade rated for cutting non-ferrous metals
- Circular saw or table saw with carbide-tipped blade (60-tooth min) rated for cutting non-ferrous metals
- Caulking gun (automatic gun recommended for consistent application)
- Screw gun/drill
- Deburring tool (Part No. DEBURRING TOOL)
- Aviation snips or heavy-duty scissors
- Plastic putty knife to remove excess caulk and adhesive from panels
- Protective gear (safety glasses, gloves to handle panels, etc.) *Jobsite safety is the responsibility of the panel installer.*

Essential Materials

- Omega-Lite FR panels
- Omega CI rigid insulation panels
- Omega CI fasteners (**refer to Omega CI Design & Installation details for fastener information**)
- Panel moldings
  - H-Molding (Part No. 4505X)
  - Reveal H-Molding (Part No. 4595X)
  - J-Molding (Part No. 4515X)
  - Termination J-Molding (Part No. 4565X)
  - Outside Corner (Part No. 4535X)
  - Termination Z-Molding (Part No. 4575X)
- Tapes
  - Closed-cell PVC foam tape (Part No. 12847)
- Soffit Vents (Part No. 50280-X)
- Reinforcement angle (Part No. 44DS-ANGLE)
  - Only required if fabricating panel corners and soffit transitions
- Self-adhering membrane flashing (Part No. OCI-MEMBRANE FLASHING)
- Color-matched flat stock aluminum for fabrication of flashings and copings
- Fasteners **(refer to AdaptaClad TF Design & Installation details for fastener information)**
- Silicone caulk*
- Fabrication sealant*
  - Only required if fabricating panel corners and soffit transitions
- Panel adhesive*
- 4" x 4" steel plates (Part No. 41ACTF-PLATE)
- Continuous steel strapping (if required for installation over exterior grade gypsum sheathing or mineral wool with z-girts) - NOT SUPPLIED BY LAMINATORS
- Optional 1/8" plastic U-shaped shims for use behind moldings (Part No. 41ACTF-SHIM)
- Optional 1/8" dowels (to be used as spacers for panel placement in moldings) - NOT SUPPLIED BY LAMINATORS

**For the most current list of approved silicone caulks, fabrication sealants, and adhesives, visit LaminatorsInc.com.*



LAMINATORS
Composite Panel Solutions

3255 Penn Street, Hatfield, PA 19440-1731

800.523.2347 | LaminatorsInc.com

©2026 Laminators Inc. All rights reserved. (10/26)